CITY OF

LIVERMORE

CALIFORNIA

STANDARD DETAILS

Published May 23, 2023

CITY
OF
LIVERMORE

STANDARD DETAILS

TABLE OF CONTENTS

SANITARY SEWER AND STORM DRAIN - S

S-1A	MAINTENANCE HOLE FRAME AND COVER ADJUSTMENT
S-1B	UTILITY FRAME AND COVER ADJUSTMENT
S-2	TYPE I MAINTENANCE HOLE, 8" TO 33" DIAMETER PIPES
S-3	TYPE II MAINTENANCE HOLE, 36" TO 60" DIAMETER PIPES
S-4	UNIMPROVED AREA UTILITY CONSTRUCTION
S-5	SANITARY SEWER LATERAL
S-6	SANITARY SEWER CROSSING REPLACEMENT
S-7	STORM WATER CURB INLET, TYPE I, 12" TO 30" DIAMETER PIPES
S-8	STORM WATER CURB INLET, TYPE II, 33" TO 60" DIAMETER PIPES
S-9	STORM WATER FIELD DROP INLET, UNIMPROVED/LANDSCAPE AREAS; AND FUTURE STREET AREA
S-10	STORM DRAIN LATERAL CONNECTION TO EXISTING REINFORCED CONCRETE PIPE STORM DRAIN MAIN
S-11	SEWAGE SAMPLING STATION
S-12	STORM WATER DROP INLET

STREETS - ST

ST-1	CUL-DE-SAC, CURB RETURNS, AND ELBOWS; HAMMERHEADS AND TEMPORARY TURNAROUND
ST-2	STREET WIDTHS; PARTIAL STREET SECTION
ST-3	MONOLITHIC SIDEWALK (RESIDENTIAL/INDUSTRIAL)
ST-4	SEPARATED SIDEWALK AND DRIVEWAY (RESIDENTIAL)
ST-5	SIDEWALK (COMMERCIAL/INDUSTRIAL)
ST-6	DRIVEWAY (STREET-LEVEL)
ST-7	DRIVEWAY (RESIDENTIAL)
ST-8	DRIVEWAY (COMMERCIAL/INDUSTRIAL)
ST-9	CURB & GUTTER, MEDIAN CURB
ST-10	TEXTURED CONCRETE PAVING
ST-11	STREET SECTION
ST-12	UTILITY LOCATIONS
ST-13	MONUMENT
ST-14	STANDARD STREET LIGHT; DECORATIVE STREET LIGHT
ST-15	BUS TURNOUT
ST-16	VALLEY GUTTER
ST-17	ROADSIDE SIGN/POST INSTALLATION
ST-18	STREET NAME SIGN AND W14-2a SPECIAL SIGN
ST-19	NUMBER NOT USED
ST-20	PRIVATE PROPERTY/CITY OFF-STREET SIGNS
ST-21	BARRICADES
ST-22	MEDIAN CONSTRUCTION
ST-23	REMOVABLE BOLLARD
ST-24	MAIL BOX INSTALLATION
ST-25	PAVEMENT WIDENING, CONNECTIONS; OVERLAY
ST-26	CROSSWALK/STOP BAR INSTALLATION
ST-27	BIKE LANES
ST-28	SIDEWALK DRAIN (RESTORATION OF EXISTING FACILITIES)
ST-29	CHAIN LINK FENCE
ST-30	PEDESTRIAN WALKWAY
ST-31	SIDEWALK REPAIR
ST-32	SIDEWALK GRINDING REPAIR
ST-33	SIDEWALK REPAIR CRITERION
ST-34	SPEED LUMPS
ST-35	SPEED TABLE CROSSWALK

WATER - W

W-1	FIRE HYDRANT AND LATERAL; FIRE HYDRANT MARKER
W-2	WATER SERVICE CONNECTION, 1", 1-1/2", AND 2"
W-3	THRUST/ANCHOR BLOCK
W-4	AIR RELEASE/BLOW-OFF
W-5	DEAD END BLOW-OFF; IN-LINE BLOW-OFF; LOW POINT BLOW-OFF (FOR PIPES LARGER THAN 12")
W-6	AIR RELEASE VALVE
W-7	WATER MAIN TEMPORARY JUMPER CONNECTIONS
W-8	TAPPING SLEEVE AND VALVE, 4" SERVICE AND LARGER (ACP, PVC & DIP)
W-9	TAPPING OUTLET AND VALVE, 4" SERVICE AND LARGER (MLCSP)
W-10	INDUSTRIAL/COMMERCIAL FIRE SERVICE, CLASS 1 AND 2, 2" AND LARGER;
	INDUSTRIAL/COMMERCIAL FIRE SERVICE, CLASS 3, 4, 5, AND 6
	INDUSTRIAL/COMMERICAL FIRE SERVICE, NOTES
	RESIDENTIAL/MULTI-FAMILY FIRE SERVICE, 1 ½” SERVICE – 6” SERVICE
	MULTI-FAMILY BUILDING CAMPUS WITH FIRE SERVICE OPTION 1
	MULTI-FAMILY BUILDING FIRE SERVICE OPTION 2A
	MULTI-FAMILY BUILDING FIRE SERVICE OPTION 2B
	MULTI-FAMILY BUILDING FIRE SERVICE OPTION 3
	RESIDENTIAL/MULTI-FAMILY FIRE SERVICE OPTION 4
	RESIDENTIAL/MULTI-FAMILY FIRE SERVICE NOTES
W-11	TURBINE METER, 3" AND LARGER
W-12	FIRE HYDRANT GUARD POST
W-13	INSULATING FLANGE
W-14	WATER LINE OFFSET
W-15	BURIED VALVE
W-16	COMMERCIAL/INDUSTRIAL JOINT DOMESTIC/FIRE SERVICE
	RESIDENTIAL/MULTI-FAMILY JOINT DOMESTIC/FIRE SERVICE
W-17	MANIFOLD WATER METER INSTALLATION
W-18	PRESSURE REDUCING STATION
W-19	(NUMBER NOT USED, FUTURE ANODE DETAIL)
W-20	(NUMBER NOT USED, FUTURE ELECTROLYSIS TESTING STATION DETAIL)
W-21	(NUMBER NOT USED, FUTURE CADWELD DETAIL)
W-22	REDUCED PRESSURE BACKFLOW PREVENTER
W-23	BONDING JUMPER
W-24	WATER TANK HOOK-UP
W-25	WATER QUALITY SAMPLING STATION
W-26	WATER LINE ANGLE MARKER
W-27	STEEL CASINGS FOR MAINS

CITY
OF
LIVERMORE

STANDARD DETAILS

TABLE OF CONTENTS

GENERAL - G

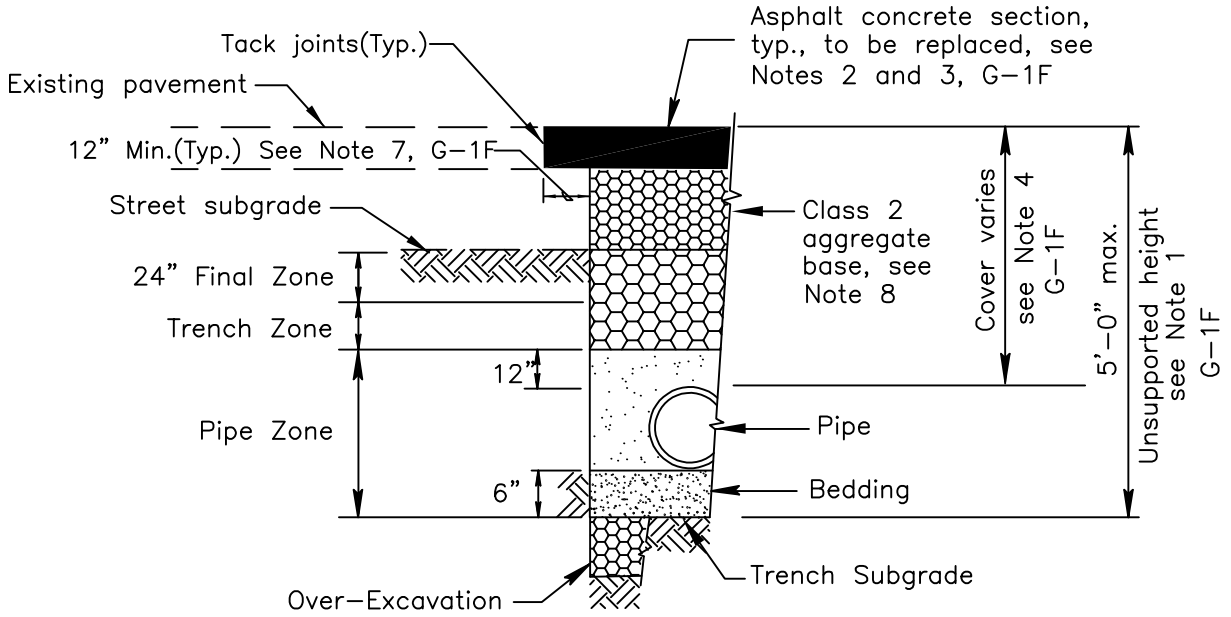

EXISTING STREET

(NON-ARTERIAL OR COLLECTOR)

Note: See G-1E for Street Classification

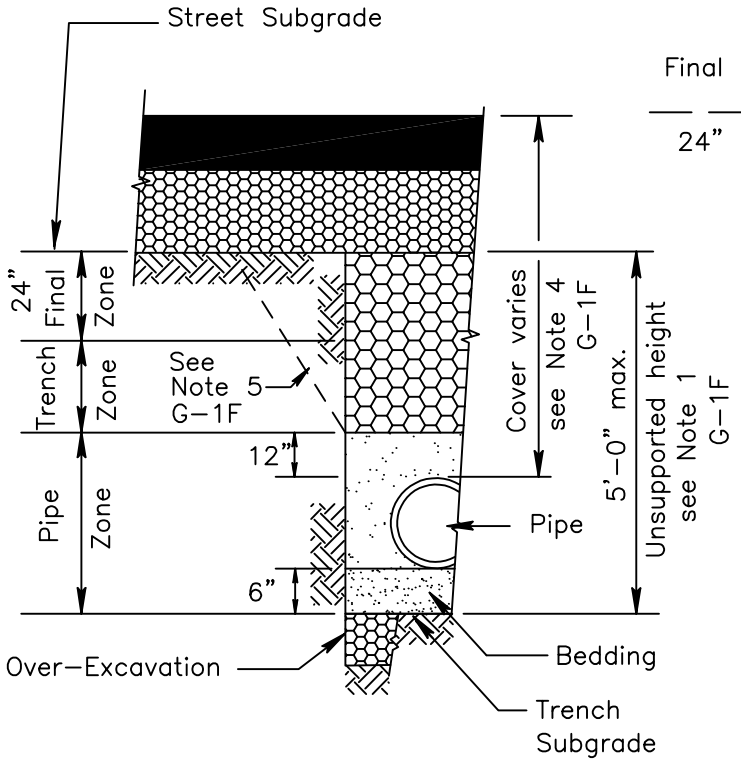

NEW STREET

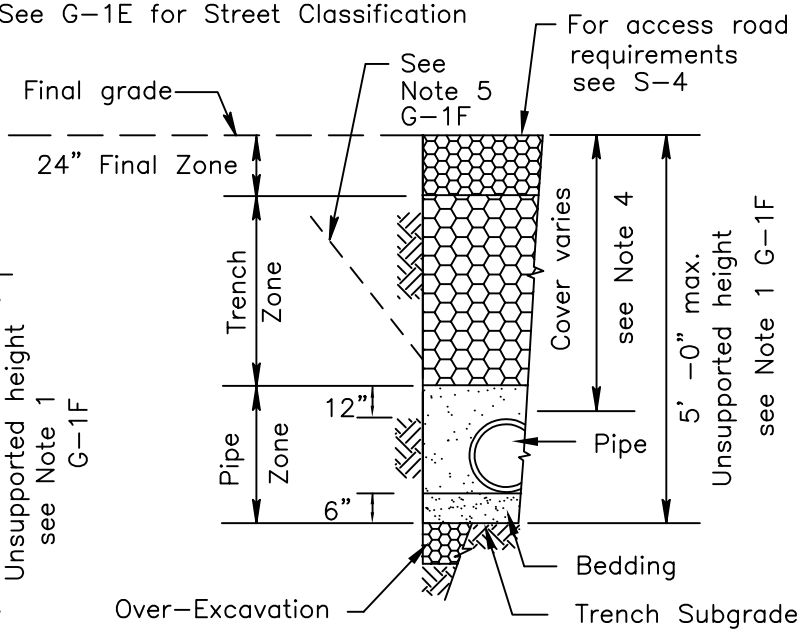

UNIMPROVED AREAS

User note:

These details shall be used in conjunction with all the City standard details and specifications. Refer to the City standard specifications for the materials, installation, testing, protective coatings, and other requirements.

Date:	By:	Rev:

TRENCH SECTION

CITY OF LIVERMORE

STANDARD DETAIL

Dwn: KY/HI	Date: April-23	No.
Ckd: Spec. Committee	Scale: None	G-1A

City Engineer

G01A.DWG

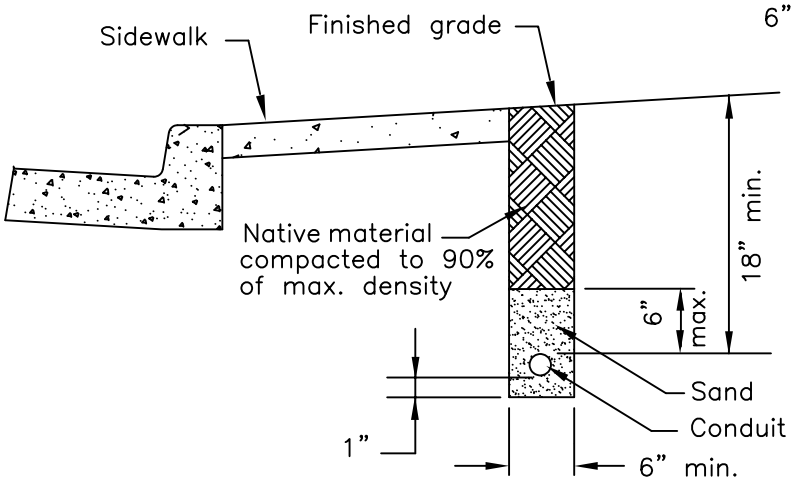

STREET LIGHT CONDUIT TRENCH SECTION (WHEN NOT IN JOINT TRENCH)

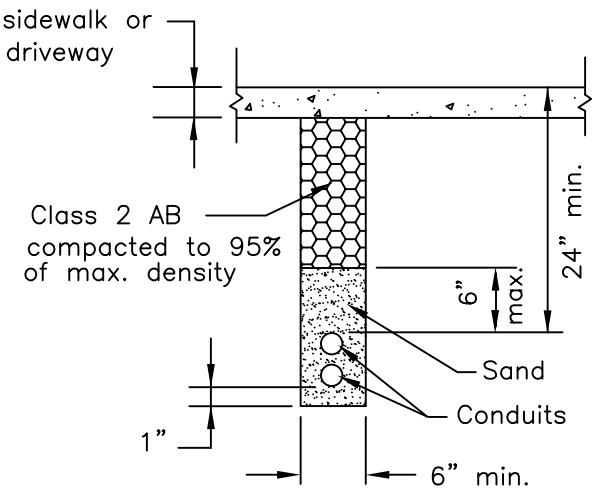

TRAFFIC SIGNAL CONDUIT TRENCH SECTION UNDER SIDEWALKS/DRIVEWAYS

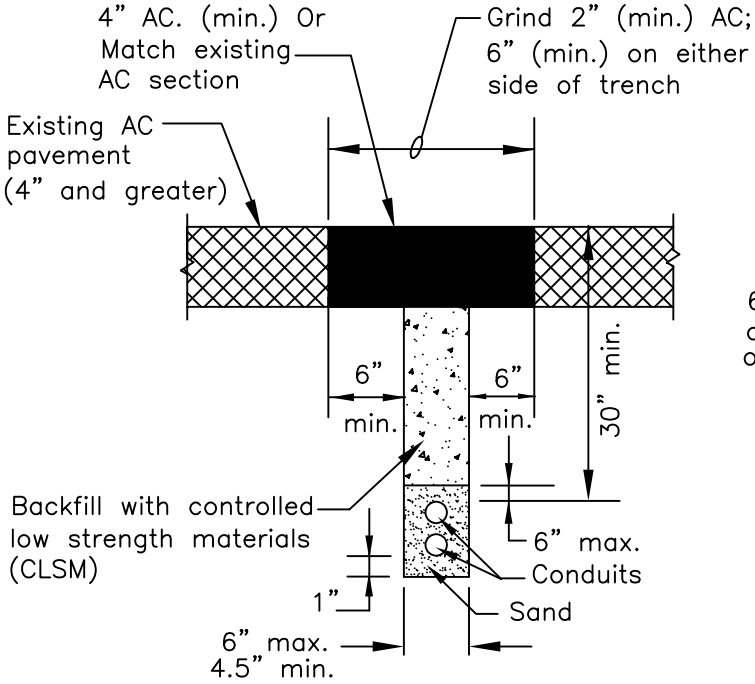

SECTION "A"
FOR EXISTING ASPHALT CONCRETE SECTIONS 4" AND GREATER

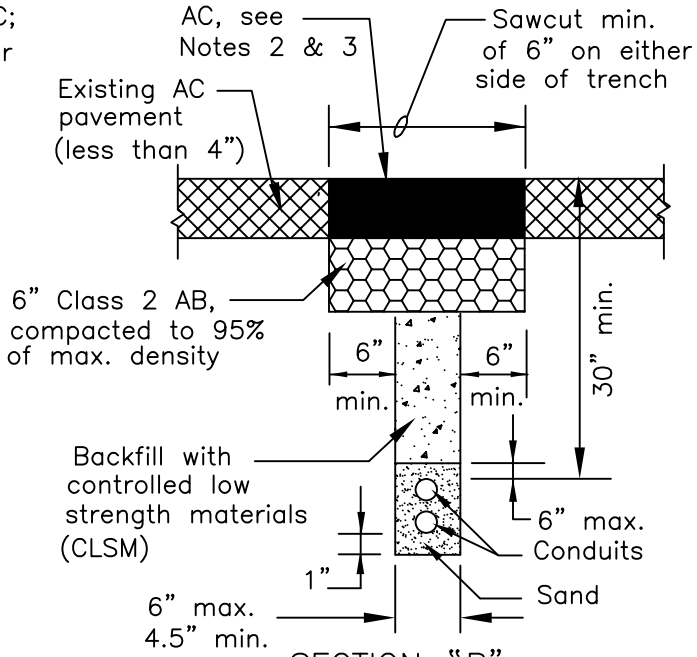

SECTION "B"
FOR EXISTING ASPHALT CONCRETE SECTIONS LESS THAN 4"

User note:
These details shall be used in conjunction with all the City standard details and specifications. Refer to the City standard specifications for the materials, installation, testing, protective coatings, and other requirements.

TELECOMMUNICATIONS CONDUIT TRENCH SECTIONS

(ELECTRICAL, TRAFFIC SIGNAL CONDUITS, STREET LIGHT CONDUIT CROSSINGS, TELEPHONE, CABLE TV / COMMUNICATION CONDUITS)

Date	By	Rev.

TRENCH SECTION

CITY OF LIVERMORE
STANDARD DETAIL

Dwn: KY/HI	Date: Feb-23	No.
Ckd: Spec. Committee	Scale: None	G-1B

City Engineer

G01B.DWG

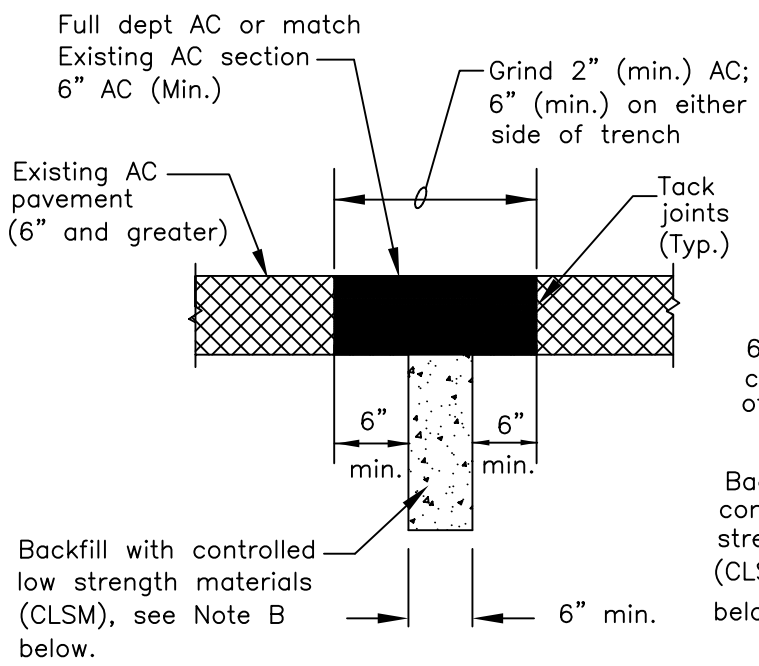

SECTION "A"
FOR EXISTING ASPHALT CONCRETE
SECTIONS 6" AND GREATER

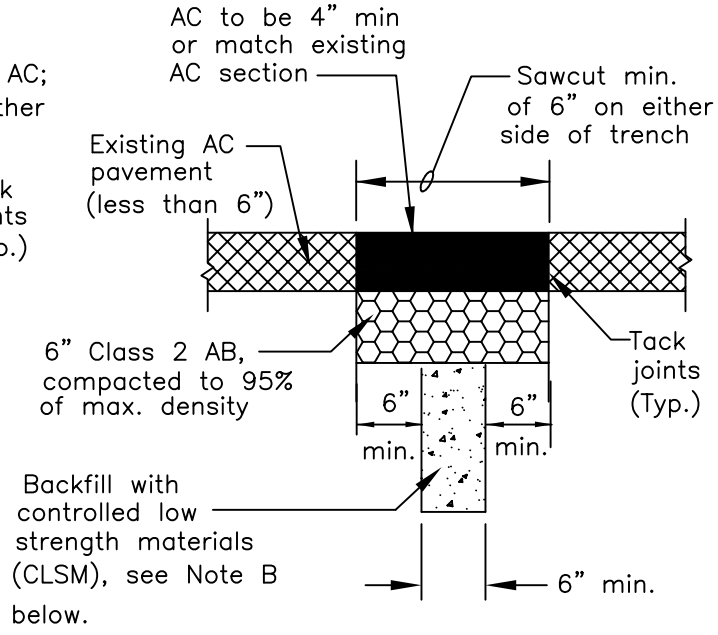

SECTION "B"
FOR EXISTING ASPHALT CONCRETE
SECTIONS LESS THAN 6"

NOTES

A. PRIOR TO TRENCHING, CONTACT USA 1–800–227–2600

B. CONTROLLED LOW STRENGTH MATERIALS (CLSM) SHALL BE A FLOWABLE, HAND–EXCAVATABLE MIXTURE OF CEMENT, POZZOLAN, COARSE AND FINE AGGREGATE, ADMIXTURES AND WATER WHICH HAS BEEN MIXED IN ACCORDANCE WITH ASTM C 94. ALL PROPERTIES, COMPOSITIONS AND INSTALLATION REQUIREMENTS SHALL BE PER SPECIFICATION SECTION 312323. (CLSM) SHALL NOT COME IN CONTACT WITH UTILITIES. MAINTAIN A CLEARANCE OF 6" MINIMUM BETWEEN CLSM AND UTILITIES FOR BACKFILL.

C. ANY EXCAVATIONS LARGER THAN 3'x3' SHALL COMPLY WITH CITY STD DETAIL G–1B.

User note:
These details shall be used in conjunction with all the City standard details and specifications. Refer to the City standard specifications for the materials, installation, testing, protective coatings, and other requirements.

Date:	By:	Rev:

SOIL BORING AND
SMALL EXCAVATION IN STREET
SECTION

CITY OF LIVERMORE
STANDARD DETAIL

Dwn: MAP/HI	Date: Feb–23	No.
Ckd: Spec. Committee	Scale: None	G–1C

City Engineer

G01C.DWG

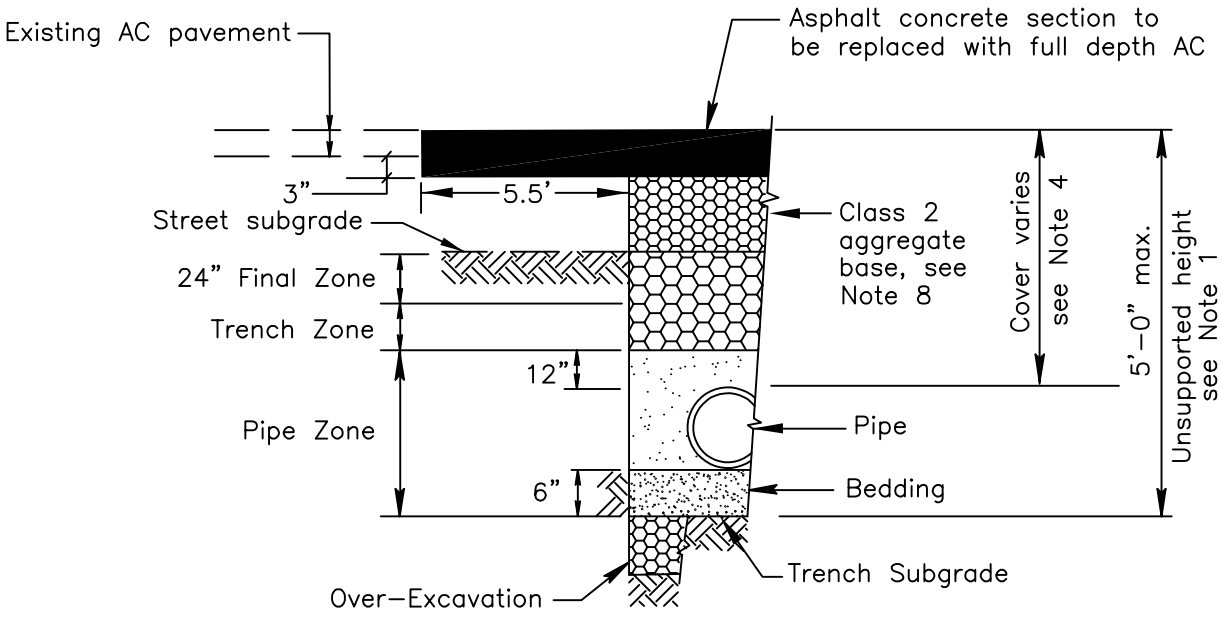

PAVEMENT LESS THAN 6"

*More than 50% grind weakens remaining base lift

**Caltrans Sec. 39.304 Pave HMA in Max 0.25 foot thick compacted layers

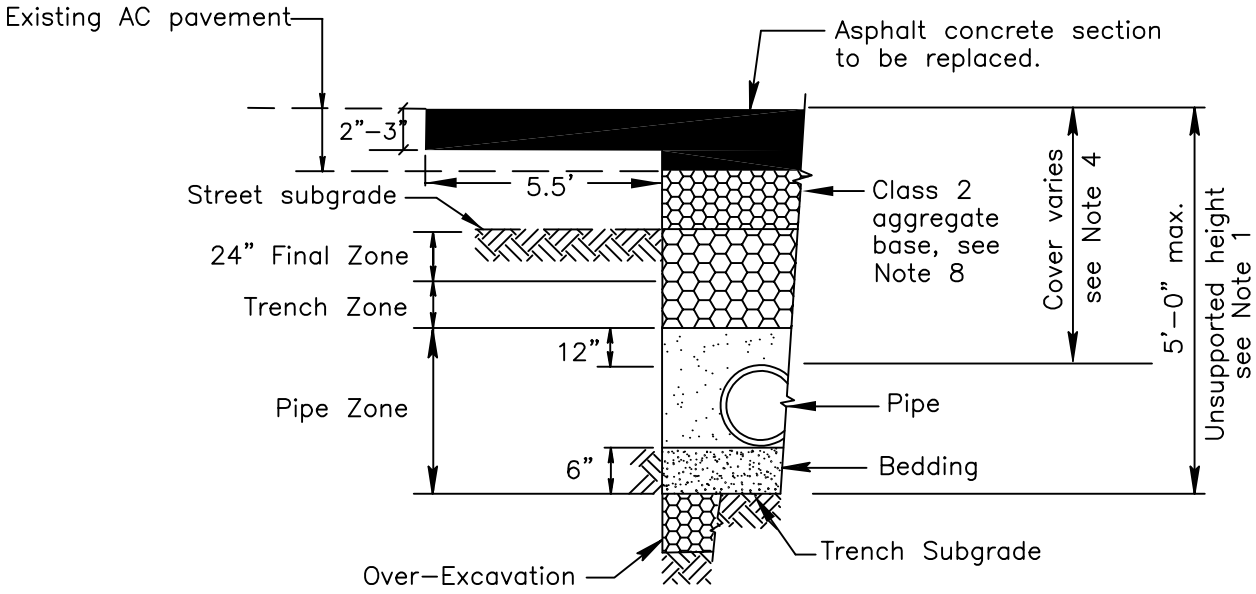

PAVEMENT GREATER THAN 6"

User note:
These details shall be used in conjunction with all the City standard details and specifications. Refer to the City standard specifications for the materials, installation, testing, protective coatings, and other requirements.

Note: Refer to City Standard Detail No. G-1F for applicable street classification.

Date:	By:	Rev:	TRENCH PAVEMENT REPAIR ARTERIALS AND COLLECTORS	CITY OF LIVERMORE STANDARD DETAIL		
				Dwn: M. IRBY/HI	Date: Feb-23	No.
				Ckd: M. CAVALIERI	Scale: None	G-1D
				City Engineer		

G01E.DWG

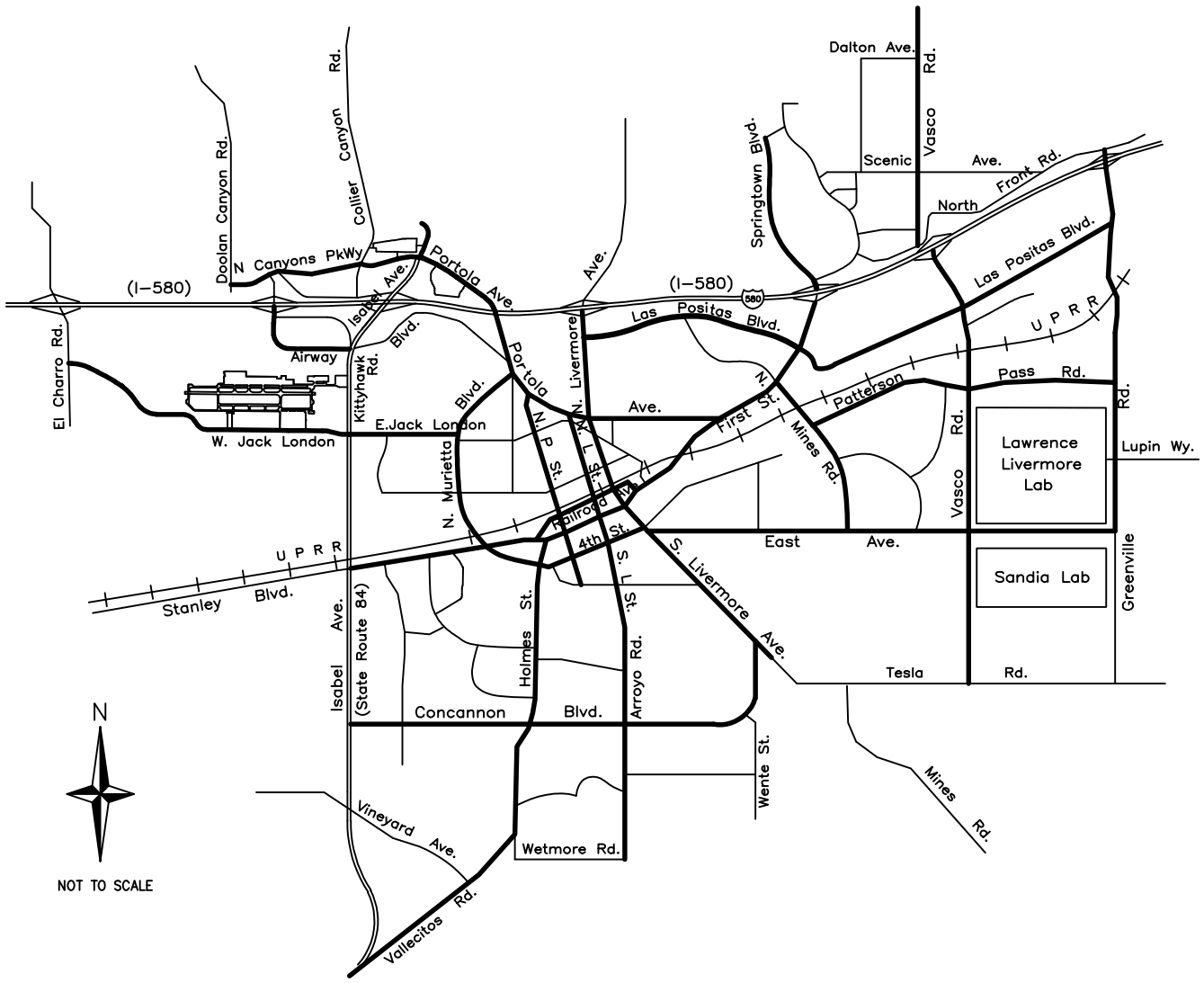

ARTERIALS

COLLECTORS

User note:

These details shall be used in conjunction with all the City standard details and specifications. Refer to the City standard specifications for the materials, installation, testing, protective coatings, and other requirements.

Date:	By:	Rev:

TRENCH PAVEMENT REPAIR ARTERIALS AND COLLECTORS LOCATION MAP

CITY OF LIVERMORE
STANDARD DETAIL

Dwn: MM-HI	Date: Feb-23	No.
Ckd: Spec Comm	Scale: None	G-1E

Acting City Engineer

G01E.DWG

NOTES:

1. Trenching shall conform to the "Construction Safety Orders of the State of California" and Section 6705 of the California Labor Code.
2. In existing streets, the total asphalt concrete thickness replaced shall not be less than 6" (4" in residential streets), or match the existing asphalt concrete section, whichever is greater.
3. In existing streets the asphalt concrete bottom lift(s) shall not be less than 4" (2" in residential streets), and the asphalt concrete top lift shall not be less than 2".
4. Where adequate compaction cannot be achieved due to obstruction or other conditions, replace pipe zone and/or trench zone fill with Controlled Low Strength Material (CLSM) as directed by the ENGINEER.
5. Sloping trench sections, above pipe zone, can only be used where stable compact soil conditions exist, where approved by the ENGINEER, or where shown on the drawing or specifications. Sloping trench sections will not be allowed in existing streets.
6. Prior to trenching, contact USA 1-800-227-2600
7. Before pavement section is replaced, the existing pavement shall be sawcut at least 12 inches back from trench excavation along neat, straight, parallel lines. [Where the existing asphalt concrete is 6" or more in thickness or where the repaving is less that 15 square feet in area, sawcut may be the edge of the trench excavation.] Expect for Arterial and Collector Street (See G-1D). Where wall of trench excavation is within 18" of the lip of gutter replace AC from trench wall to lip of gutter. All AC and concret areas shall be tack coat prior to paving.
8. In existing streets the total aggregate base shall be the greater of the existing street aggregate base section or the following minimum aggregate base:
   a) Local, loops, cul-de-sac, and private residential streets: 12" AB (min.)
   b) Collector, frontage, major, and industrial/commercial streets: 18" AB (min.)
9. See the "Utility Earthwork" section of the City standard specifications 31.2300 for compaction requirements, metric specifications and additional information.
10. Edge sealing, the application of asphalt material along the edges of a patch. This ensures water cannot penetrate the patch seam.

User note:
These details shall be used in conjunction with all the City standard details and specifications. Refer to the City standard specifications for the materials, installation, testing, protective coatings, and other requirements.

Date	By	Rev.

G01C.DWG

TRENCH SECTION

CITY OF LIVERMORE
STANDARD DETAIL

Dwn: M-W/KY/HI	Date: Jan-23	No.
Ckd: Spec. Committee	Scale: None	G-1F

City Engineer

BASIC SEPARATION STANDARDS:

1. Parallel construction: The horizontal clear distance between pressure domestic water and reclaimed water mains and sewer lines shall be at least 10 feet clear.
2. Perpendicular construction (Crossing): Pressure water mains shall be at least one (1) foot clear above sanitary sewer and reclaimed water lines where these lines must cross.
3. The basic separation standard are applicable under normal conditions for sewer lines and water distribution lines. More stringent requirements as determined by the State Health Department may be necessary if conditions, such as, high ground water exist.
4. Special Provisions: Alternative construction criteria where the basic separation standards cannot be attained are shown below and on G–2B:

SPECIAL PROVISIONS GENERAL NOTES (SEE G–2B):

1. No pipe joints shall be permitted within Zones C and D.
2. All DIP must have hot DIP bituminous coating and all Class 200 PVC must meet DR–14 per AWWA C900 or equivalent.
3. Sewer force mains shall not be permitted in Zones A through D.
4. This criteria does not apply for a reclaimed water line crossing another reclaimed water line.
5. The construction criteria should apply to the house laterals that cross above a pressure water main but not to those house laterals that cross below a pressure water main.
6. Construction for sewer and domestic water or reclaimed water lines 24" diameter or larger will not be allowed without the approval of the Engineer and the State Health Department.
7. See G–2B for applicable situations.

User note:
These details shall be used in conjunction with all the City standard details and specifications. Refer to the City standard specifications for the materials, installation, testing, protective coatings, and other requirements.

Date:	By:	Rev:

G2A.DWG

REQUIRED SEPARATION BETWEEN WATER, SEWER AND RECLAIMED WATER PIPELINES

CITY OF LIVERMORE
STANDARD DETAIL

Dwn: KY	Date: May–13	No.
Ckd: Spec. Committee	Scale: None	G–2A

City Engineer

SITUATION: Location of NEW [SEWER / RECLAIMED WATER] lines to EXISTING [DOMESTIC WATER / RECLAIMED WATER] line.

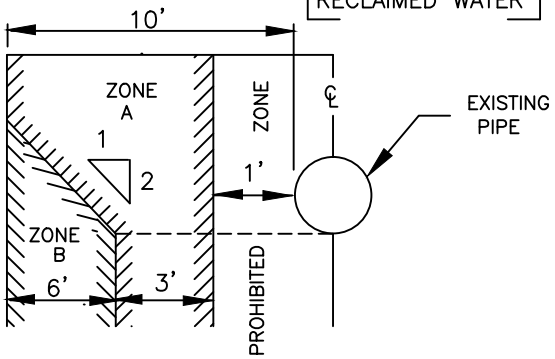

PARALLEL CONSTRUCTION

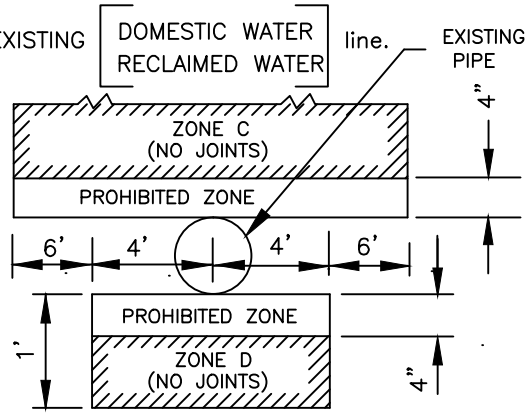

PERPENDICULAR CONSTRUCTION

If any sewer or reclaimed water pipelines are to be constructed within any of the above indicated Zones, special construction shall be required as described below.

Construction Requirements

ZONE	NEW SEWER:
A	Do not locate any parallel sewer lines in this area without State and Local Health Department Approval.
B	Use VCP, PVC sewer pipe with rubber ring joints, or DIP with compression joints.
C	Use DIP with mechanical joints or PVC Class 200 – AWWA C900
D	Use DIP or PVC Class 200 – AWWA C900

ZONE	NEW RECLAIMED WATER:
A	Do not locate any parallel reclaimed water line in this area without State and Local Health Department Approval.
B	Use DIP or PVC Class 200 – AWWA C900
C	Use DIP or PVC Class 200 – AWWA C900
D	Use DIP or PVC Class 200 – AWWA C900

SITUATION: Location of NEW [DOMESTIC WATER / RECLAIMED WATER] lines to EXISTING [SEWER / RECLAIMED WATER] line.

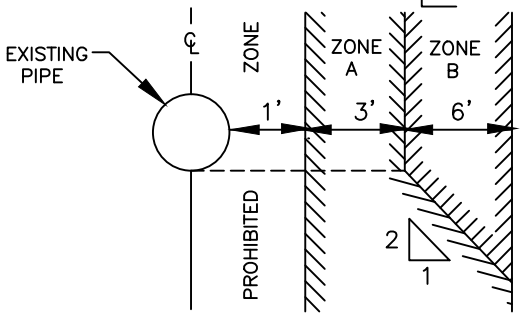

PARALLEL CONSTRUCTION

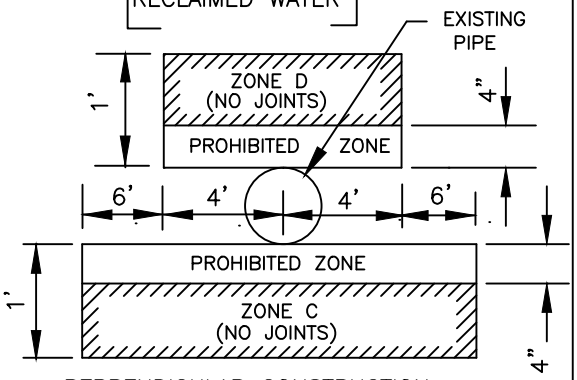

PERPENDICULAR CONSTRUCTION

If any water or reclaimed water pipelines are to be constructed within any of the above indicated Zones, special construction shall be required as described below.

Construction Requirements

ZONE	NEW DOMESTIC OR RECLAIMED WATER:
A	Do not locate any parallel domestic water or reclaimed water main in this area without State and Local Health Department Approval.
B	Use DIP or PVC Class 200 – AWWA C900
C	Use DIP or PVC Class 200 – AWWA C900
D	Use DIP or PVC Class 200 – AWWA C900

User note:

These details shall be used in conjunction with all the City standard details and specifications. Refer to the City standard specifications for the materials, installation, testing, protective coatings, and other requirements.

Date:	By:	Rev:

REQUIRED SEPARATION BETWEEN WATER, SEWER AND RECLAIMED WATER PIPELINES

CITY OF LIVERMORE
STANDARD DETAIL

Dwn: KY	Date: May–13	No.
Ckd: Spec. Committee	Scale: None	G–2B

City Engineer

EXISTING	PROPOSED	DESCRIPTION
		PROPERTY LINE
		SIDEWALK, CURB @ GUTTER
		CENTERLINE
		EDGE OF PAVEMENT
X" SS	MH X" SS	SANITARY SEWER & MAINTENANCE HOLE
X" SS		SANITARY SEWER & RISER
X" SD	MH X" SD	STORM SEWER & MAINTENANCE HOLE
X" SD	X" SD	STORM SEWER & INLET
X" W	X" W	WATER MAIN
M	M	MONUMENT LINE & MONUMENT
		UTILITY POLE
		TRAFFIC SIGN
		FIRE HYDRANT – commercial – residential
X"	X"	WATER MAIN & VALVE
X"	X"	WATER MAIN & BLOW-OFF
X"	X"	WATER MAIN & TEE
X"	X"	WATER MAIN & CROSS
X"	X"	WATER MAIN & REDUCER
X"	X"	GAS MAIN
X"	X"	TELEPHONE CONDUIT
		ELECTROLIER & CONDUIT

X" = indicate size in inches

Date	By	Rev.

STANDARD SYMBOLS

CITY OF LIVERMORE
STANDARD DETAIL

Dwn: KY	Date: May-13	NO.
Ckd: Spec. Committee	Scale: NONE	G-3

City Engineer

G03.DWG

PIPE TYPE IDENTIFICATION	PIPE TYPE USAGE	APPROVED PIPE MATERIALS (1)	REFERENCE TO NOTES	SPEC. SECTION
STORM DRAIN (SD)	Mains and Laterals	ABS/PVCsdnpp	4, 7	333104
		HDPE	7	334100
		RCP	7	334102
		CIPCP	2	033050
		DIP		055900
	Force Main	PVCpp		331102
		DIP		055900
SANITARY SEWER (SS)	Trunk Main (Major) 30" and larger	RCP(PVCL)	7	333100
	Trunk Main (Minor) Larger than 15" and less than 30"	VCP/PVCsdnpp	4, 7	333106/ 333104
	Force Main	PVCpp		331102
		DIP		055900
	Street Main, Up to 15"	ABS/PVC Composite	7	333102
		ABS/PVCsdnpp	7	333104
		VCP	7	333106
		DIP	7	055900
	Service Lateral	ABS/PVC Composite		333102
		ABS/PVCsdnpp		333104
		VCP		333106
		DIP		055900
WATER (W)	Distribution Main, Up to 12"	PVCpp		331102
		DIP		055900
	Transmission Main, Larger than 12"	PVCpp		331102
		MLCSP	2	331104
		DIP	2	055900
	1" Residential Domestic/ Fire Service Lateral	PE		331200
	1", 1-1/2", & 2" Service Lateral	PE		331200
	4" and larger Industrial/Commercial Fire Service Lateral	PVCpp		331102
		DIP	2	055900
	Fire Hydrant Lateral	PVCpp	3	331102
		MLCSP	2	331104
		DIP		055900

SEE G-4B

User note:

These details shall be used in conjunction with all the City standard details and specifications. Refer to the City standard specifications for the materials, installation, testing, protective coatings, and other requirements.

Date:	By:	Rev:

SCHEDULE OF ACCEPTABLE PIPE MATERIALS

CITY OF LIVERMORE
STANDARD DETAIL

Dwn: M-W	Date: May-13	No.
Ckd: Spec. Committee	Scale: None	G-4A

City Engineer

G04A.DWG

PIPE TYPE IDENTIFICATION	PIPE TYPE USAGE	APPROVED PIPE MATERIALS (1 & 6)	REFERENCE TO NOTES	SPEC. SECTION
STORM DRAIN (SD)				
RECLAIMED WATER	Distribution Main, Up to 12"	PVCpp		331102
		DIP		055900
	Transmission Main, Larger than 12"	PVCpp		331102
		DIP	2	055900
	Fire Hydrant Lateral	PVCpp		331102
		DIP		055900
	Irrigation	PVCpp		331102
		PVCpp		328000

Notes:

1. Pipe material types shall be selected according to the service and function listed. Services or functions not identified or pipe types not listed require specific written approval of the ENGINEER. Pipe materials shall be in strict accordance with the City Standard Specifications.
2. Use of pipe material type requires written approval of the ENGINEER.
3. In City of Livermore water service area, where water main is MLCSP and when required by the ENGINEER, Fire Hydrant Laterals shall be MLCSP.
4. All PVCsdnpp for Storm Drain mains and Sanitary Sewer Trunk Mains (Minor) greater than 15" shall have a maximum SDR of 26 and a minimum pipe stiffness of 115 psi.
5. In areas of corrosive soils, high ground water tables and other adverse conditions, the pipe material shall be as specified by the ENGINEER.
6. See the City's latest "Guidelines for the use of Reclaimed Water" for information and requirements for connection to the City's reclaimed water system.
7. See City's latest Development Plan Check and Procedures Manual for City Pipe Design Criteria. A registered Civil Engineer shall provide deflection/load calculations for all Storm Drain and Sewer Main pipes in accordance with the City's Pipe Design Criteria.

User note:
These details shall be used in conjunction with all the City standard details and specifications. Refer to the City standard specifications for the materials, installation, testing, protective coatings, and other requirements.

Date:	By:	Rev:

SCHEDULE OF ACCEPTABLE PIPE MATERIALS NOTES

CITY OF LIVERMORE
STANDARD DETAIL

Dwn: M-W | Date: May-13 | No.
Ckd: Spec. Committee | Scale: None | G-4B

City Engineer

G04B.DWG

CONCRETE CLASS USE TABLE		
TYPE OF CONSTRUCTION	**CONCRETE CLASS**	**Maximum Slump ±1 Inch**
Street Surface Improvements (See Note 1)		
Curb, Gutter, Sidewalk, Driveways	3	4
Commercial/Industrial Driveways, Bus Turnouts, Valley Gutter	Minor Concrete	4
Extruded Curb	1	2
Sewer & Storm Drain Facilities		
Pipe Collars, Beam Support of Pipe, Pre-Cast Maintenance Hole Base, Storm Water Inlets	2	4
V-Ditches	3	4
Cast-In-Place Pipe	1	2
Reinforced Structures		
Retaining Walls Channels and Boxes	2	4
Water System Facilities		
Thrust Blocks, Valve Supports	2	4
Miscellaneous		
Street Light and Traffic Signal Foundations	2	4
Survey Monuments, Fence and Guardrail Post Foundations	4	4

Class 1 concrete shall contain not less than 675 pounds of Portland Cement per cubic yard
Class 2 concrete shall contain not less than 590 pounds of Portland Cement per cubic yard
Class 3 concrete shall contain not less than 505 pounds of Portland Cement per cubic yard
Class 4 concrete shall contain not less than 420 pounds of Portland Cement per cubic yard
Minor concrete shall contain not less than 550 pounds of Portland Cement per cubic yard unless otherwise specified in the specifications or the special provisions.

NOTE:

1. For surface improvements, use 3/4 lb. lamp black per cubic yard
2. Fly Ash 15% max per CT Sec 90 sewer only

User note:
These details shall be used in conjunction with all the City standard details and specifications. Refer to the City standard specifications for the materials, installation, testing, protective coatings, and other requirements.

Date	By	Rev.

CONCRETE CLASS USE TABLE

CITY OF LIVERMORE
STANDARD DETAIL

Dwn: MM	Date: Nov-22	NO.
Ckd: Spec. Committee	Scale: NONE	G-5

City Engineer

ABBREVIATIONS

AB = aggregate base
ABS = Acrylonitrile–Butadiene–Styrene pipe
AC = asphalt concrete
AWWA = American Water Works Association
Caltrans = State of California, Department of Transportation
CF = cubic foot (feet)
cl. = clear
CLSM = Controlled low strength materials
conc. = concrete
const. = construction
CIP = cast–in–place
CIPCP = cast–in–place concrete pipe
CVC = California Vehicle Code
C&G = curb & gutter
℄ = centerline
Detail x = Caltrans striping designation
DF = douglas fir
dia. = diameter
DIP = ductile iron pipe
dist. = distance
DWY = driveway
elev. = elevation
E.P. = edge of pavement
exist. = existing
FC = face of curb
FL = flow line
galv. = galvanized
HDPE = corrugated high density polyethylene nonpressure pipe
HPS = high pressure sodium
I.D. = inside diameter
I.p. = iron pipe
LCC = Livermore City Code
LPD = Livermore Police Department
LS = registered land surveyor
LSE = landscape easement
max. = maximum
mech = mechanical
MH = maintenance hole
min. = minimum
MLCSP = mortar–lined and mortar–coated steel pipe
mph = miles per hour
O.C. = on center
O.D. = outside diameter
PCC = portland cement concrete
PE = polyethylene plastic pipe
PL = property line
pt. = point
PUE = public utilities easement
PVC = polyvinyl chloride pipe
PVCpp = PVC pressure pipe
PVCsdnpp = PVC storm drain nonpressure pipe
R = radius
RCE = registered civil engineer
RCP = reinforced concrete pipe
RCPP = reinforce concrete pressure pipe
RCP(PVCL) = reinforced concrete pipe (PVC lined)
req'd = required
(rt) = right
R/W = right of way
"s" = slope
SD = storm drain
Sch. = schedule
sq. = square
SS = sanitary sewer
std. = standard
SW = sidewalk
SWE = sidewalk easement
T = telephone
TC = top of curb
T.V. = television
typ. = typical
T&B = top & bottom
VCP = vitrified clay pipe
W = water
WRD = Water Resources Division
w/ = with
Φ = diameter
(lt) = left

User note:
These details shall be used in conjunction with all the City standard details and specifications. Refer to the City standard specifications for the materials, installation, testing, protective coatings, and other requirements.

Date	By	Rev.

ABBREVIATIONS

CITY OF LIVERMORE
STANDARD DETAIL

Dwn: KY	Date: May–13	NO.
Ckd: Spec. Committee	Scale: NONE	G–6

City Engineer

G07.DWG

CITY
OF
LIVERMORE

STANDARD DETAILS

TABLE OF CONTENTS

LANDSCAPE AND IRRIGATION - L

NOTES:

1. Install 1"–deep transverse joints at a spacing equal to 1.5 times the width of each median section, unless otherwise approved.
2. Textured concrete paving color & pattern are subject to City approval.
3. If roadway structural section is greater than 14", install water barrier extending from top of pavers to 6" below street subgrade. See L–2C.
4. Irrigation main line to be placed outside of face of water barrier.

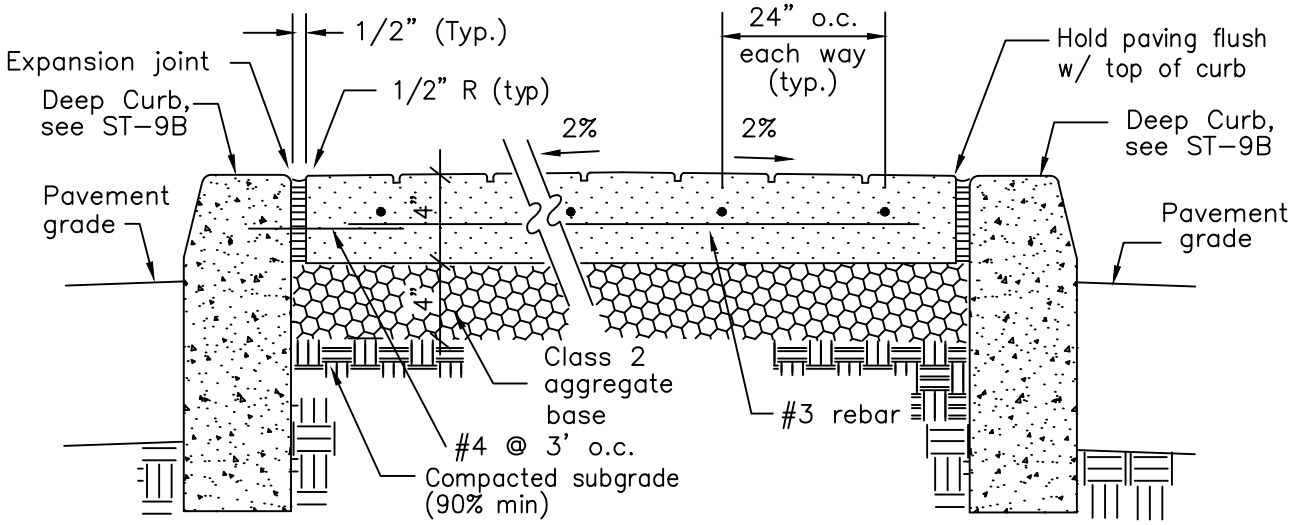

MEDIAN NOSE SECTION

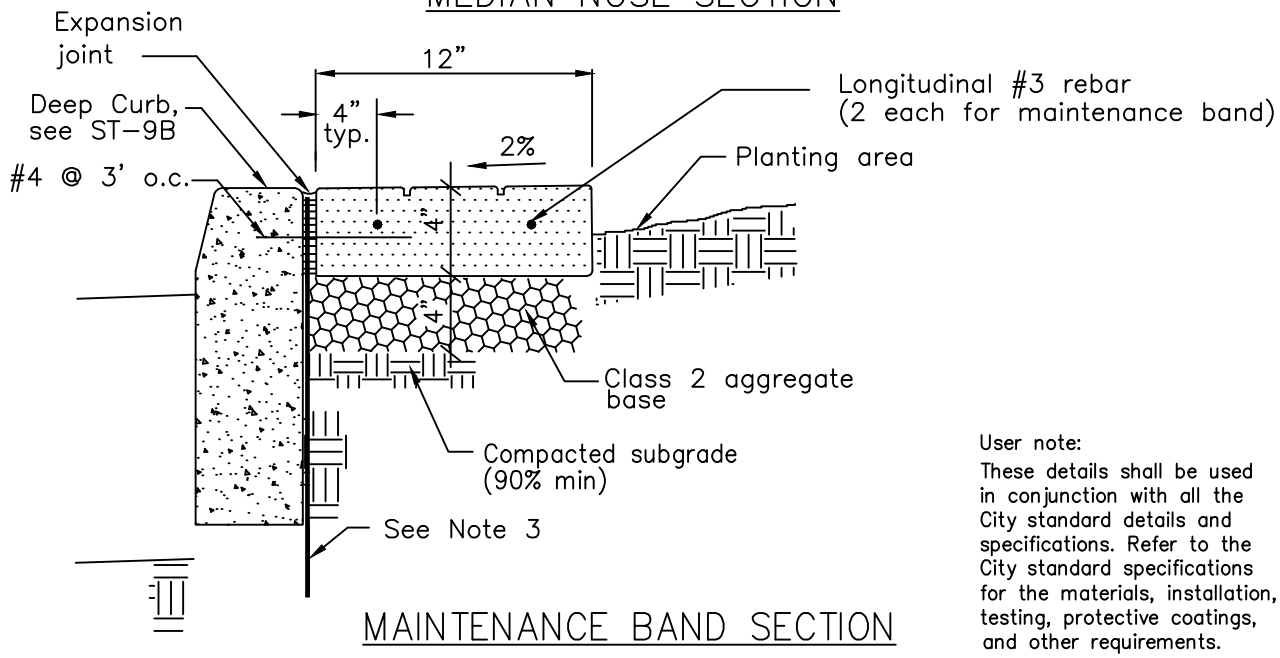

MAINTENANCE BAND SECTION

User note:
These details shall be used in conjunction with all the City standard details and specifications. Refer to the City standard specifications for the materials, installation, testing, protective coatings, and other requirements.

Date	By	Rev.

MEDIAN PAVING

TEXTURED CONCRETE

CITY OF LIVERMORE
STANDARD DETAIL

Dwn: FY	Date: May–13	NO.
Ckd: Spec. Committee	Scale: NONE	L–1A
City Engineer		

L01A.DWG

NOTES:

1. Interlocking precast concrete paver color and pattern subject to City approval.
2. Aggregate base to be treated with a pre–emergent herbicide.
3. If roadway structural section is greater than 14", install water barrier extending from top of pavers to 6" below street subgrade. See L–2C.
4. Irrigation main line to be placed outside of face of water barrier.

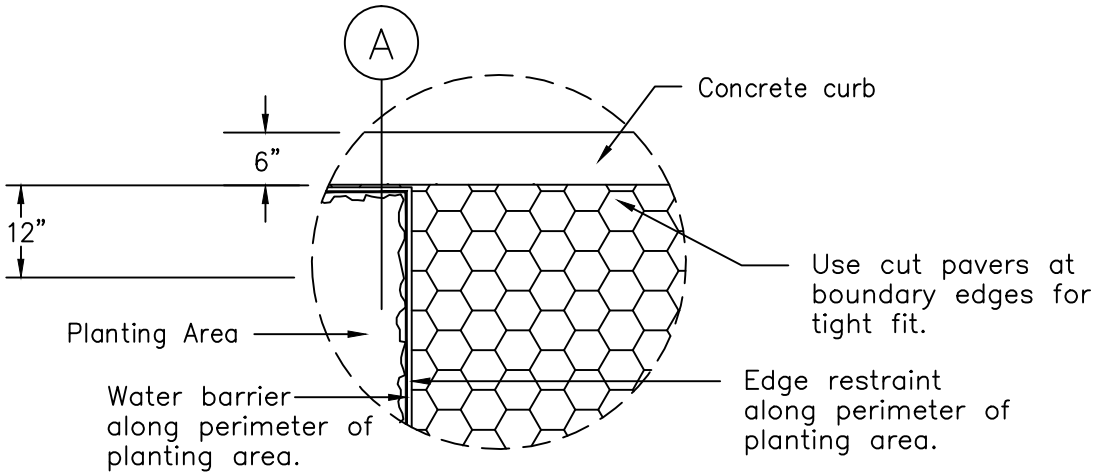

PLAN

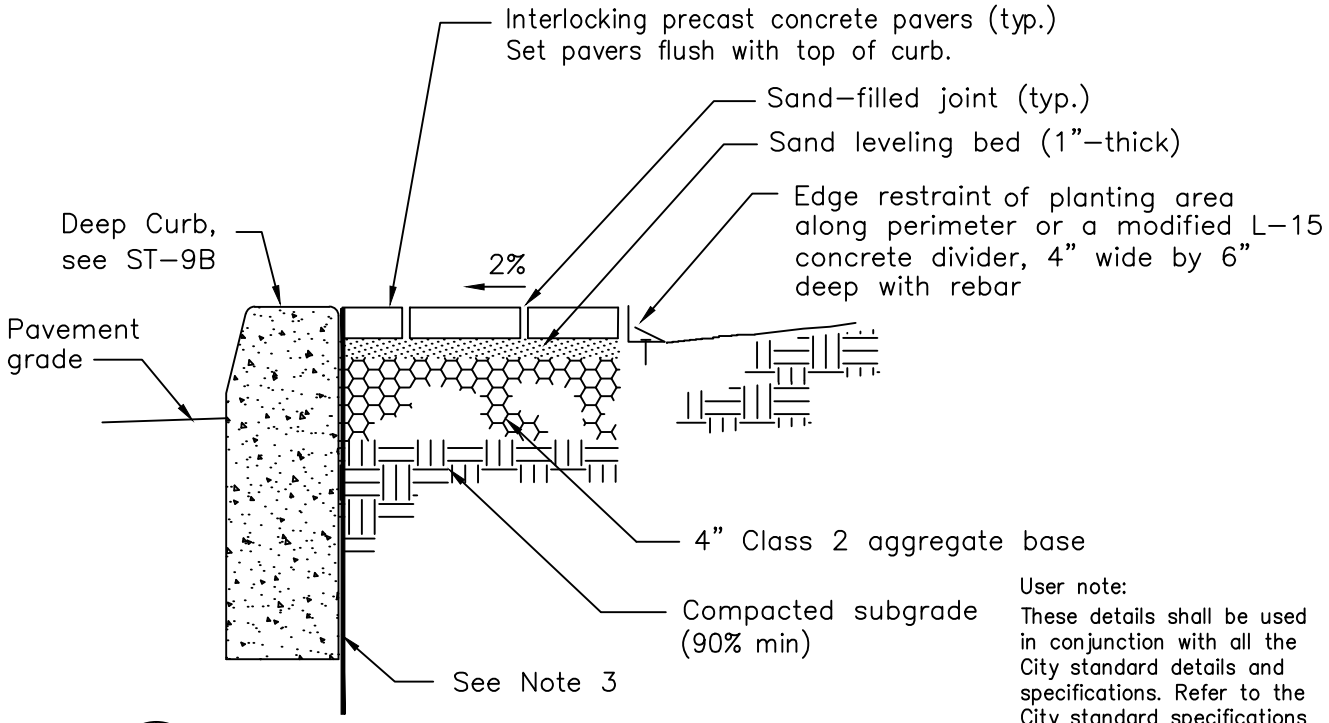

A MAINTENANCE BAND SECTION

User note:
These details shall be used in conjunction with all the City standard details and specifications. Refer to the City standard specifications for the materials, installation, testing, protective coatings, and other requirements.

Date	By	Rev.

MEDIAN PAVING

INTERLOCKING PRECAST CONCRETE PAVERS

CITY OF LIVERMORE
STANDARD DETAIL

Dwn: FY	Date: May–13	NO.
Ckd: Spec. Committee	Scale: NONE	L–1B
City Engineer		

L01B.DWG

NOTES:

1. Cobblestone subject to City approval.
2. Aggregate base to be treated with a pre–emergent herbicide as approved by the City.
3. If roadway structural section is greater than 14", install water barrier extending from top of pavers to 6" below street subgrade, See L–2C.
4. Irrigation main line to be placed outside of face of water barrier.

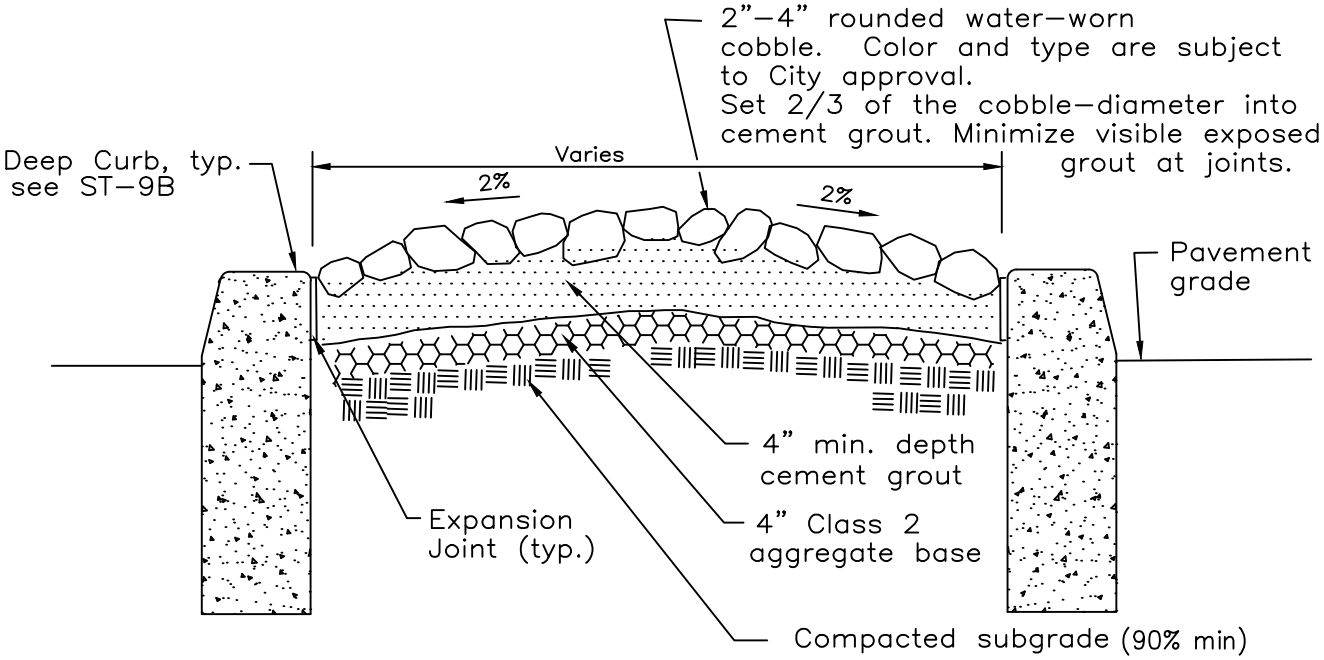

MEDIAN NOSE SECTION

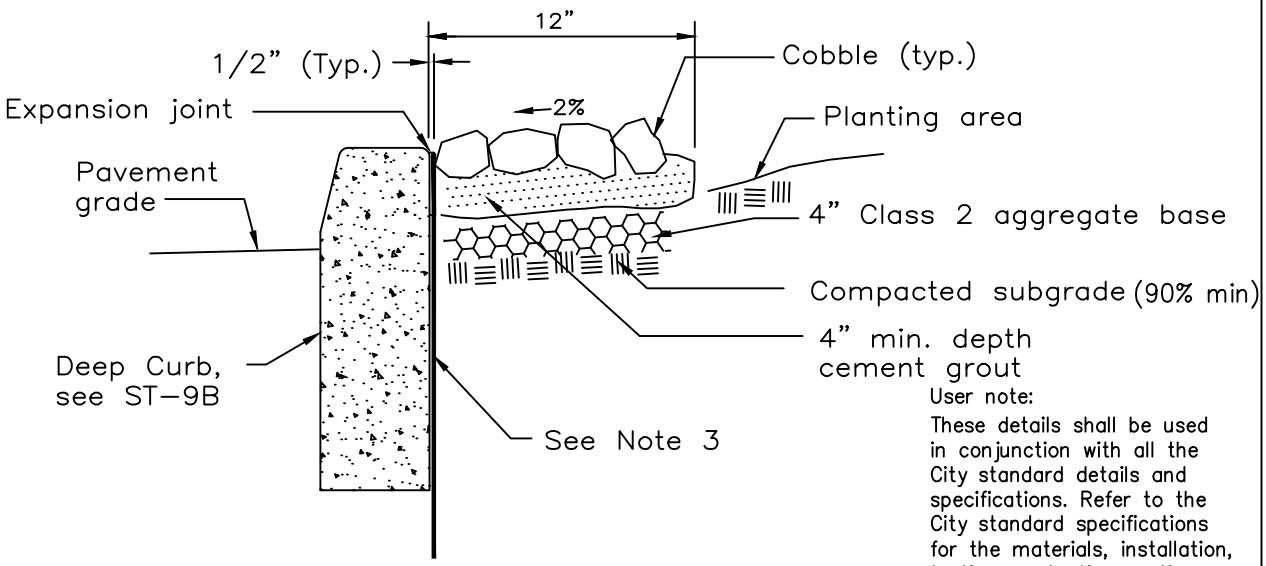

MAINTENANCE BAND SECTION

User note:
These details shall be used in conjunction with all the City standard details and specifications. Refer to the City standard specifications for the materials, installation, testing, protective coatings, and other requirements.

Date	By	Rev.

MEDIAN PAVING

COBBLESTONE

CITY OF LIVERMORE
STANDARD DETAIL

Dwn: MAS	Date: May–13	NO.
Ckd: Spec. Committee	Scale: NONE	L–1C

City Engineer

L01C.DWG

NOTE: This detail is only a guideline. Plant variety/size and hardsurfacing materials are subject to City approval. Minimum quantities of plant materials are shown.

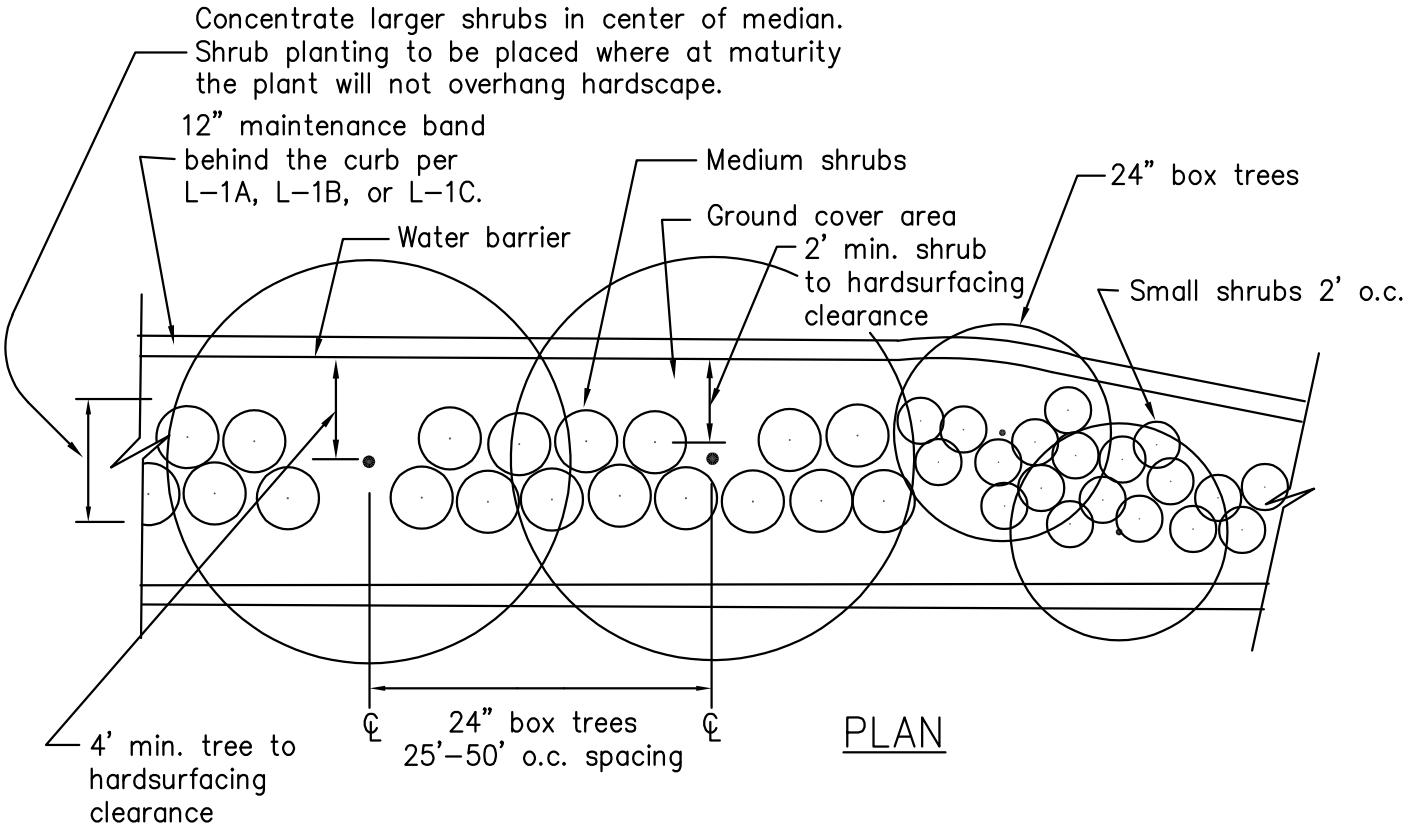

Minimum quantity of plant material per 100' long section of standard 16'–wide median. Quantities will vary proportionally for other median widths.

TREES:
- 24"–box: 2–4 trees per 100' large canopy trees
- 24"–box: 3–7 trees per 100' accent trees

SHRUBS (Mature Height)
- Large: 5'–10' high, 30 shrubs per 100'
- Medium: 3'–5' high, 40 shrubs per 100'
- Small: 1'–3' high, 50 shrubs per 100'

GROUND COVER
- Fast growing: 12" o.c.
- Moderate growing: 9" o.c.
- Slow growing: 6" o.c.

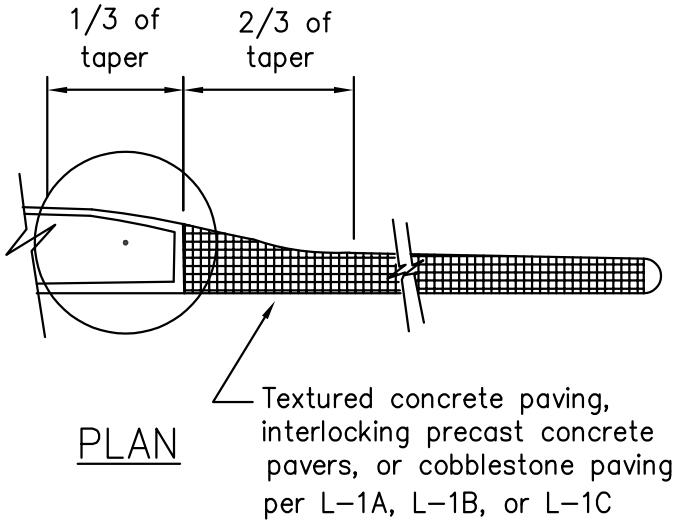

NOTES:
1. Areas between plants shall receive a 3" layer of mulch.
2. Trees within 300' of intersections, as measured from centerline of the cross–street, shall have canopies trimmed to provide 8' clear from top of of curb to lowest scaffold branch. Groundcover within 300' of intersections and driveways shall be specified as a low–growing variety, with native growth height of no more than 30" above top of curb including mounding.

User note:
These details shall be used in conjunction with all the City standard details and specifications. Refer to the City standard specifications for the materials, installation, testing, protective coatings, and other requirements.

Date	By	Rev.
6/23/20	JT	1

MEDIAN PLANTING

GENERAL

CITY OF LIVERMORE
STANDARD DETAIL

Dwn: FY/JT	Date: Nov –22	NO.
Ckd: Spec. Committee	Scale: NONE	L–2A

City Engineer

L02A.DWG

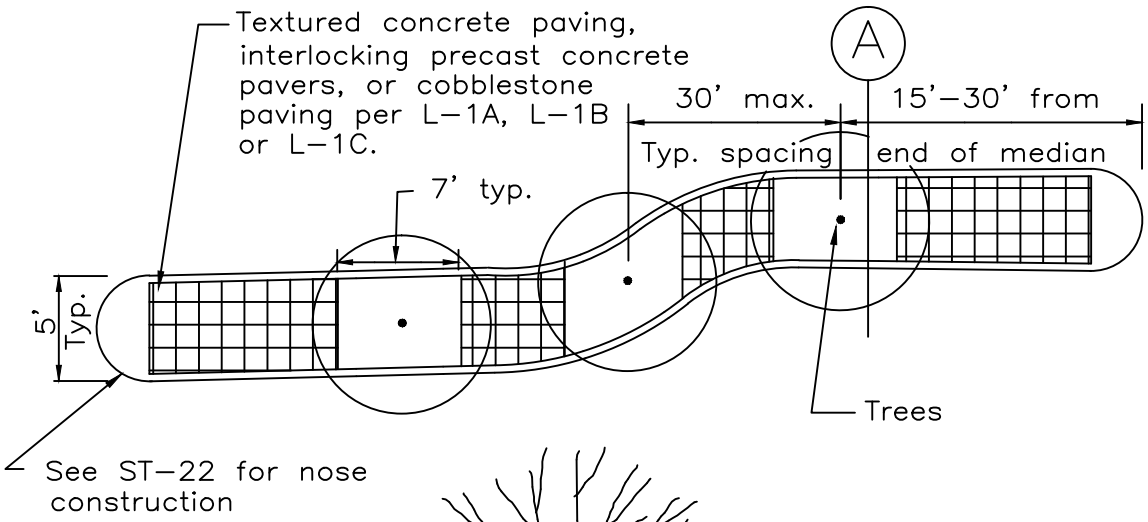

PLAN

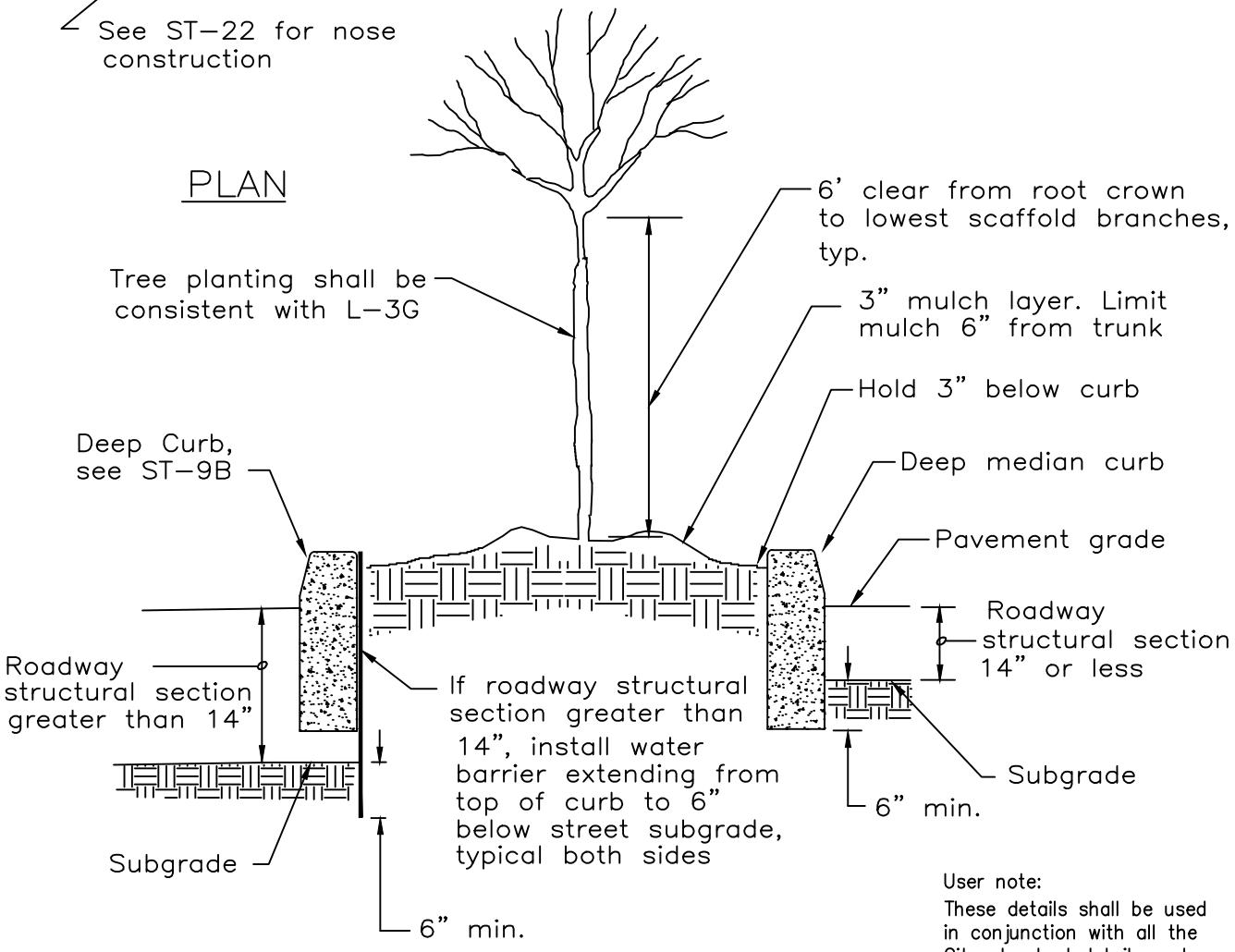

A SECTION

User note:
These details shall be used in conjunction with all the City standard details and specifications. Refer to the City standard specifications for the materials, installation, testing, protective coatings, and other requirements.

Date	By	Rev.

MEDIAN PLANTING

NARROW MEDIANS

CITY OF LIVERMORE
STANDARD DETAIL

Dwn: MAS		Date: May–13	NO.
Ckd: Spec. Committee		Scale: NONE	L–2B
City Engineer			

L02B.DWG

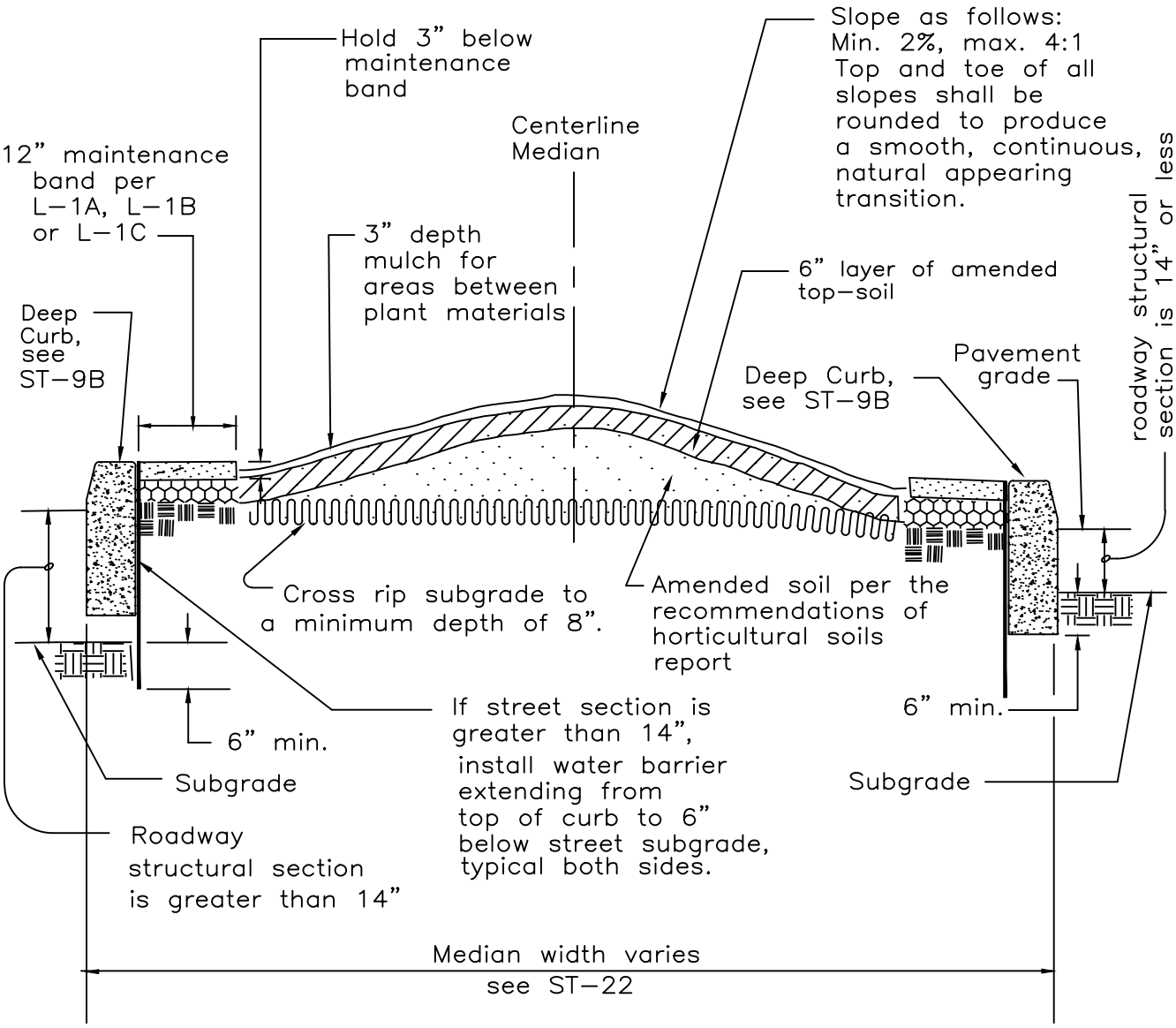

SECTION

User note:
These details shall be used in conjunction with all the City standard details and specifications. Refer to the City standard specifications for the materials, installation, testing, protective coatings, and other requirements.

Date	By	Rev.

MEDIAN PLANTING

WIDE MEDIANS

CITY OF LIVERMORE
STANDARD DETAIL

Dwn: FY	Date: May-13	NO.
Ckd: Spec. Committee	Scale: NONE	L-2C

City Engineer

L02C.DWG

Minimum street tree quantities for new development:

1. Single frontage residential lot – 1 tree.
2. Dual frontage (corner) lot – 2 trees.
3. Industrial/commercial frontage – 1 tree per 50' of frontage.
4. Backing Lot – Per L–17A or L–17B.

All tree varieties and quantities are subject to City approval.

Minimum street tree clearances (see schematic plan below for illustration):

1. Street trees shall be located 8' (min.) from sanitary sewer mains and laterals.
2. Street trees shall be located 5' (min.) from water mains and services.
3. Street trees shall be located 5' (min.) from fire hydrants.
4. Street trees shall be located 8' from driveways.
5. Street trees shall be located 20' (min.) from standard street lights. Street trees shall be located 15' (min.) from decorative street lights.
6. Street trees shall be located 20'(min.) from curb returns with separated sidewalk, or 10' from curb returns with monolithic sidewalk.
7. Street trees shall be located 2' (min.) from the common property line separating lots.

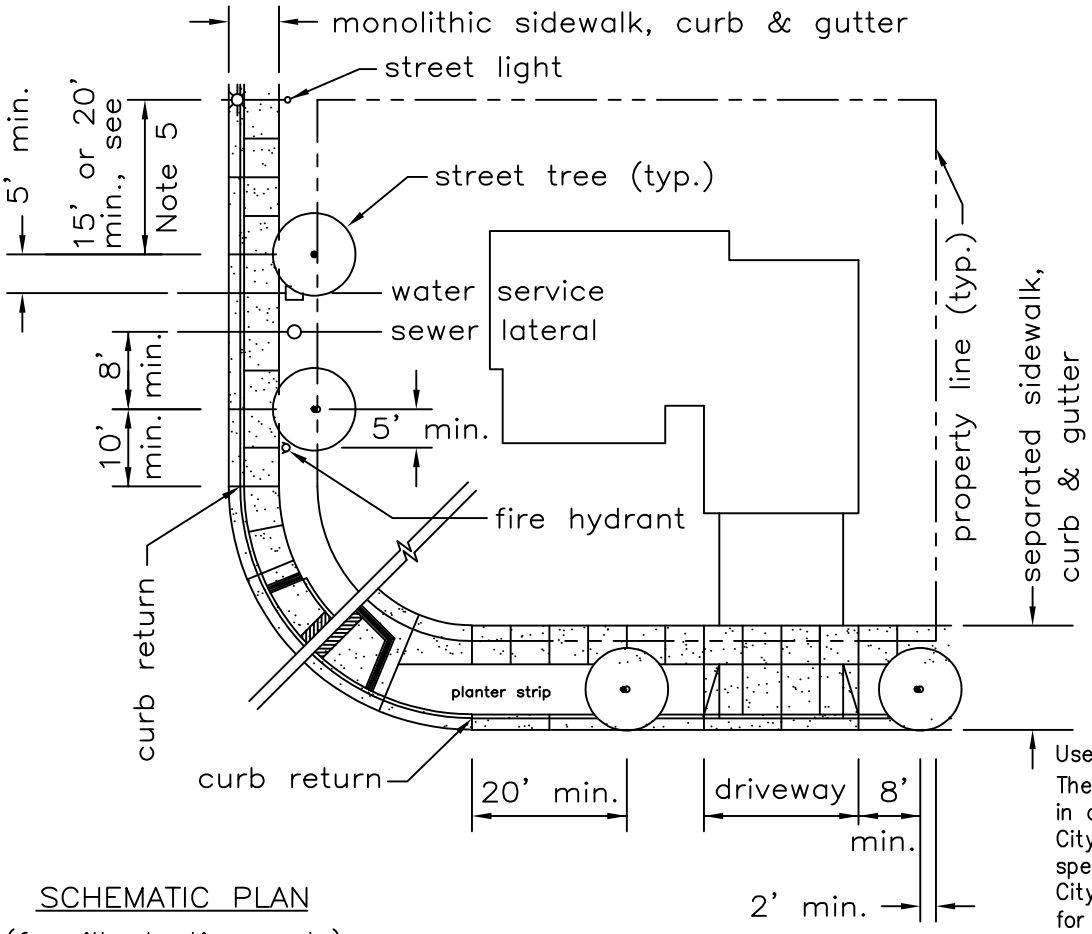

SCHEMATIC PLAN
(for illustration only)

User note:
These details shall be used in conjunction with all the City standard details and specifications. Refer to the City standard specifications for the materials, installation, testing, protective coatings, and other requirements.

Date	By	Rev.
6/23/20	JT	1

STREET TREE PLANTING

QUANTITIES & CLEARANCES

CITY OF LIVERMORE
STANDARD DETAIL

Dwn:	MAS/JT	Date: Nov–22	NO.
Ckd:	Spec. Committee	Scale: NONE	L–3A

City Engineer

L03A.DWG

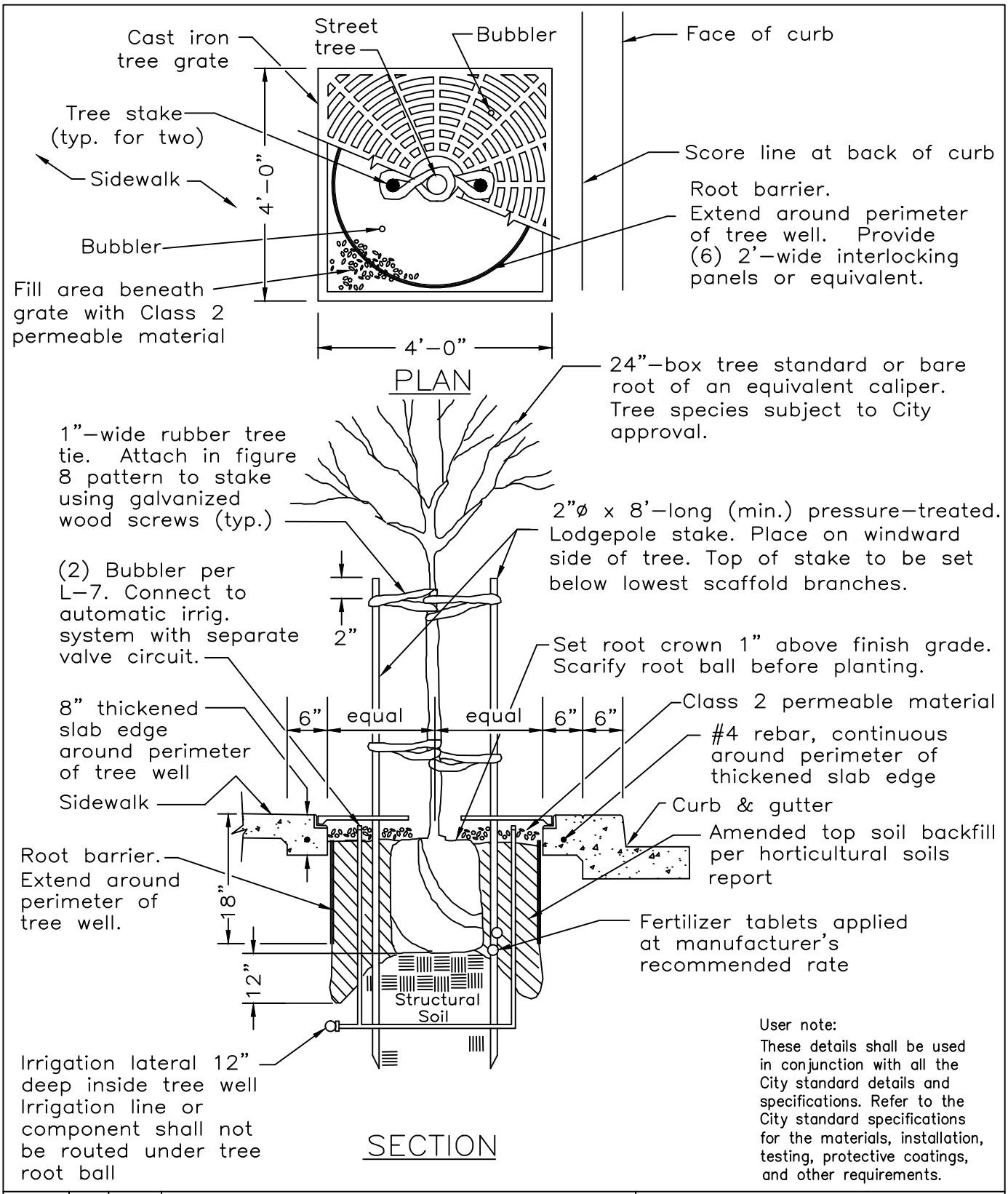

User note:
These details shall be used in conjunction with all the City standard details and specifications. Refer to the City standard specifications for the materials, installation, testing, protective coatings, and other requirements.

Date	By	Rev.

STREET TREE PLANTING

FOR TREE WELLS WITH GRATES

CITY OF LIVERMORE
STANDARD DETAIL

Dwn: FY	Date: May-13	NO.
Ckd: Spec. Committee	Scale: NONE	L-3B

City Engineer

L03A.DWG

NOTE: The mulch, if required, shall not be within 6" of the trunk of the tree.

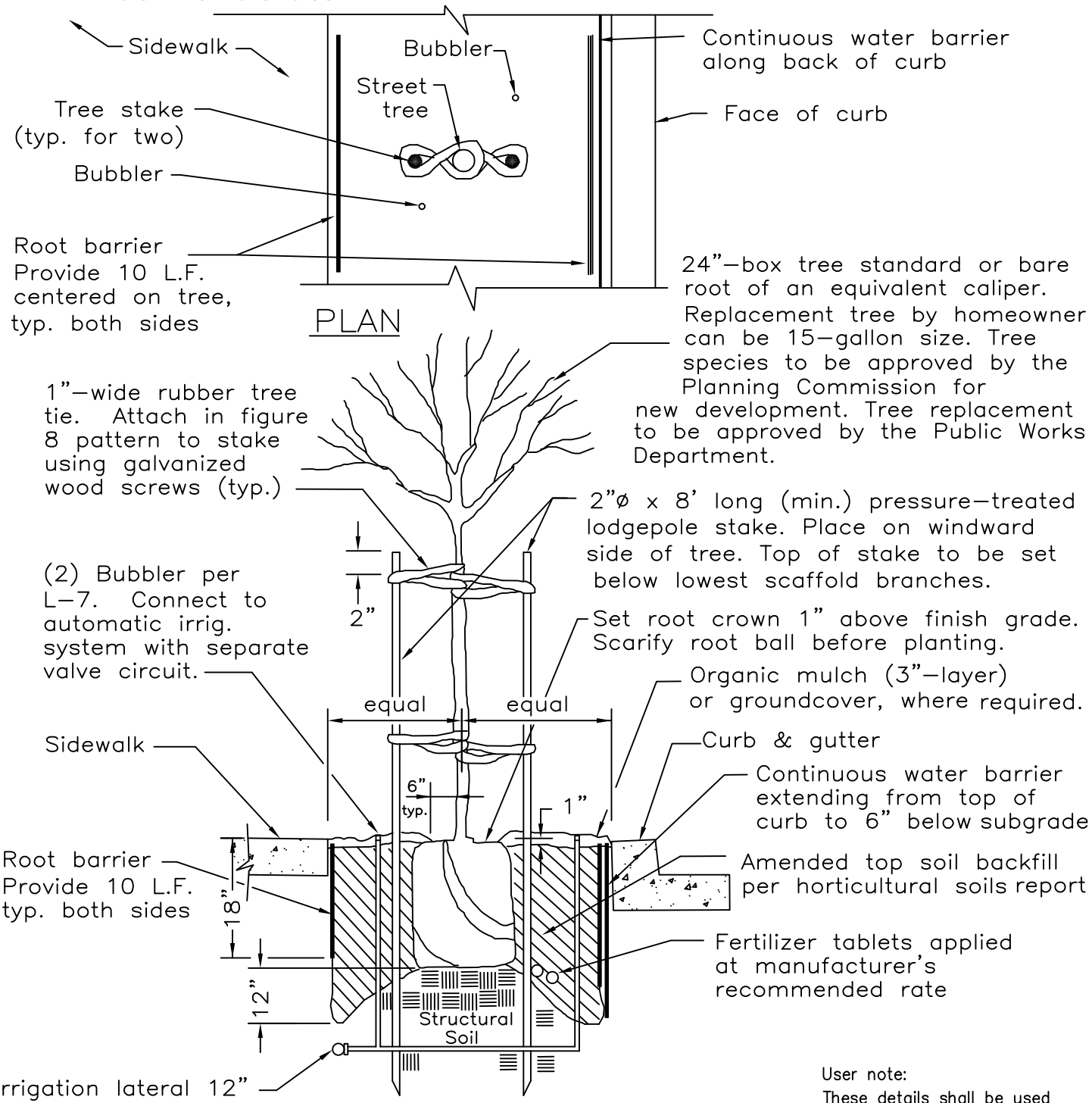

User note:
These details shall be used in conjunction with all the City standard details and specifications. Refer to the City standard specifications for the materials, installation, testing, protective coatings, and other requirements.

Date	By	Rev.
6/23/20	JT	1

L03B.DWG

STREET TREE PLANTING

FOR SEPARATED OR MEANDERING SIDEWALK

CITY OF LIVERMORE
STANDARD DETAIL

Dwn: FY/JT	Date: Nov-22	NO.
Ckd: Spec. Committee	Scale: NONE	L-3C

City Engineer

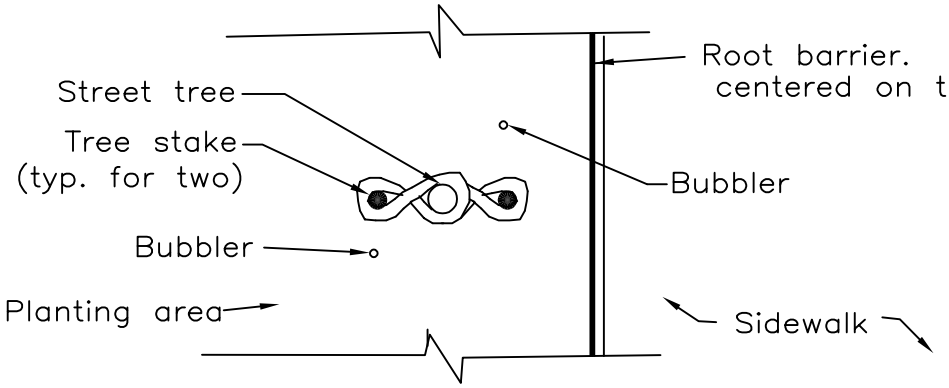

PLAN

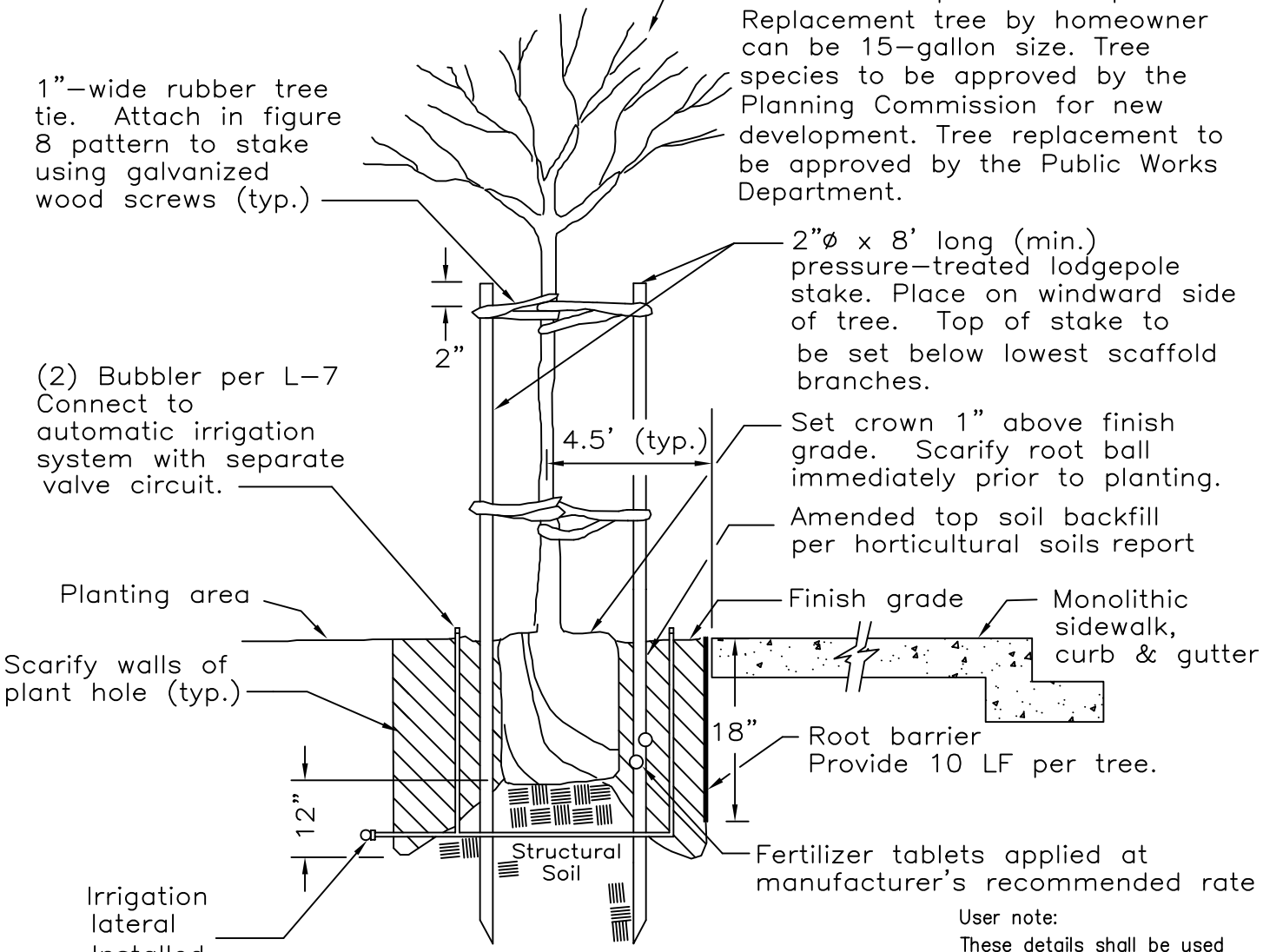

SECTION

User note:
These details shall be used in conjunction with all the City standard details and specifications. Refer to the City standard specifications for the materials, installation, testing, protective coatings, and other requirements.

Date	By	Rev.
6/23/20	JT	1

STREET TREE PLANTING
FOR MONOLITHIC SIDEWALK

CITY OF LIVERMORE
STANDARD DETAIL

Dwn: FY/JT	Date: Nov–22	NO.
Ckd: Spec. Committee	Scale: NONE	L–3D

City Engineer

L03D.DWG

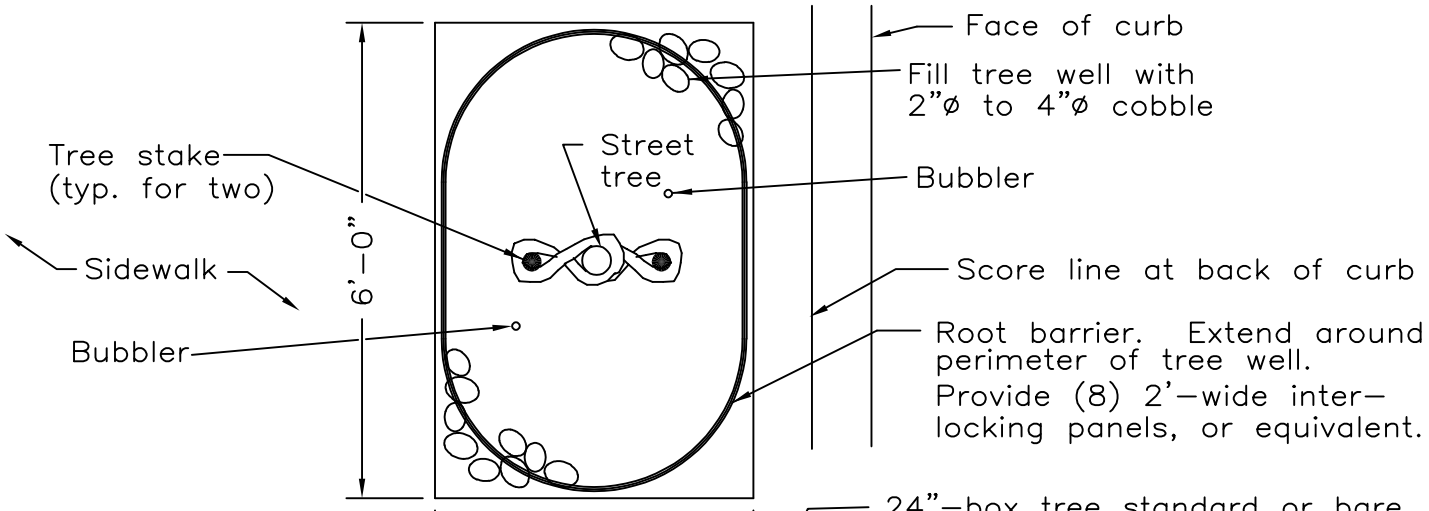

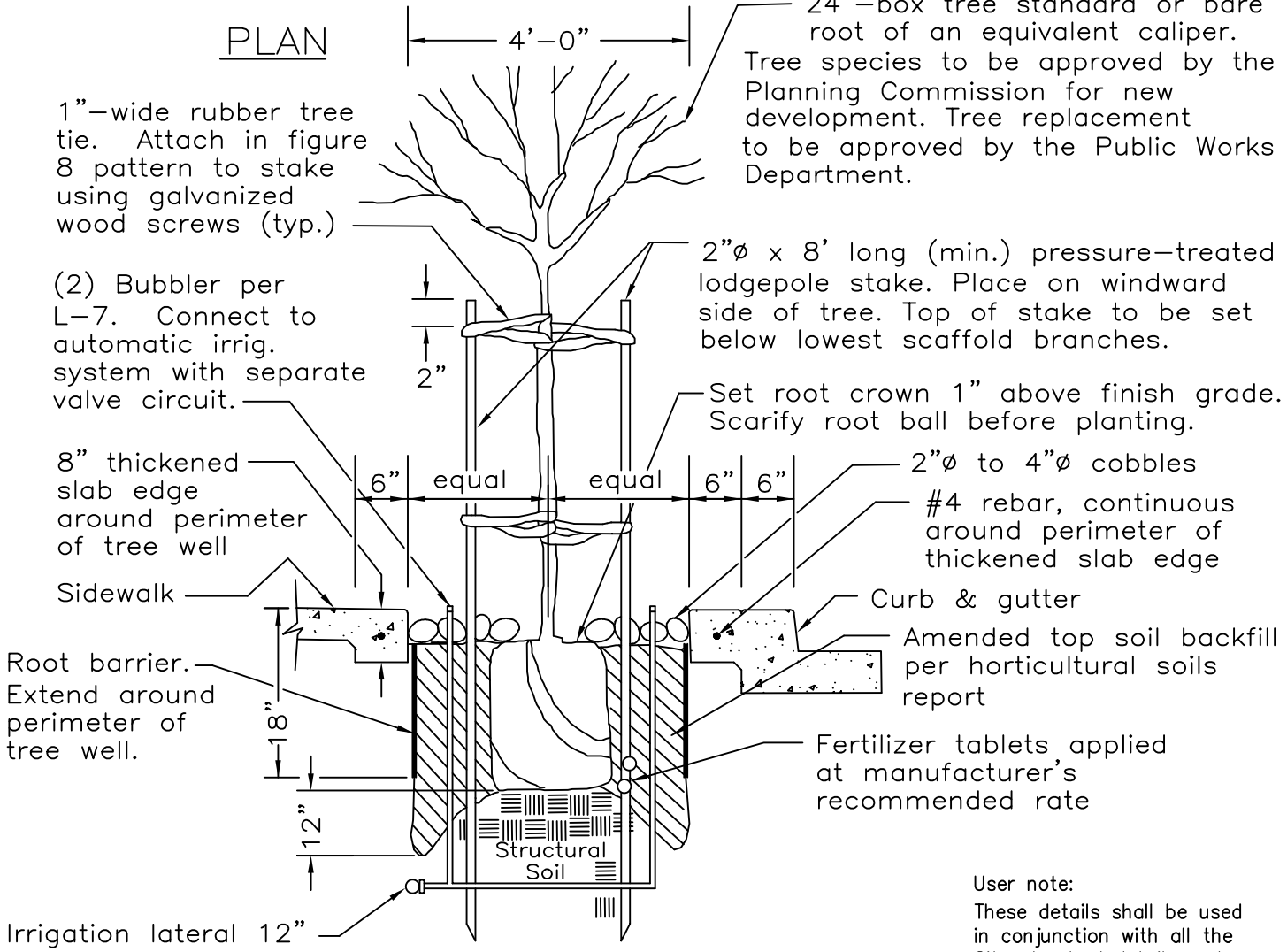

User note:
These details shall be used in conjunction with all the City standard details and specifications. Refer to the City standard specifications for the materials, installation, testing, protective coatings, and other requirements.

Date	By	Rev.
6/23/20	JT	1

STREET TREE PLANTING
FOR TREE WELLS

CITY OF LIVERMORE
STANDARD DETAIL

Dwn: FY/JT	Date: Nov-22	NO.
Ckd: Spec. Committee	Scale: NONE	L-3E

City Engineer

L03E.DWG

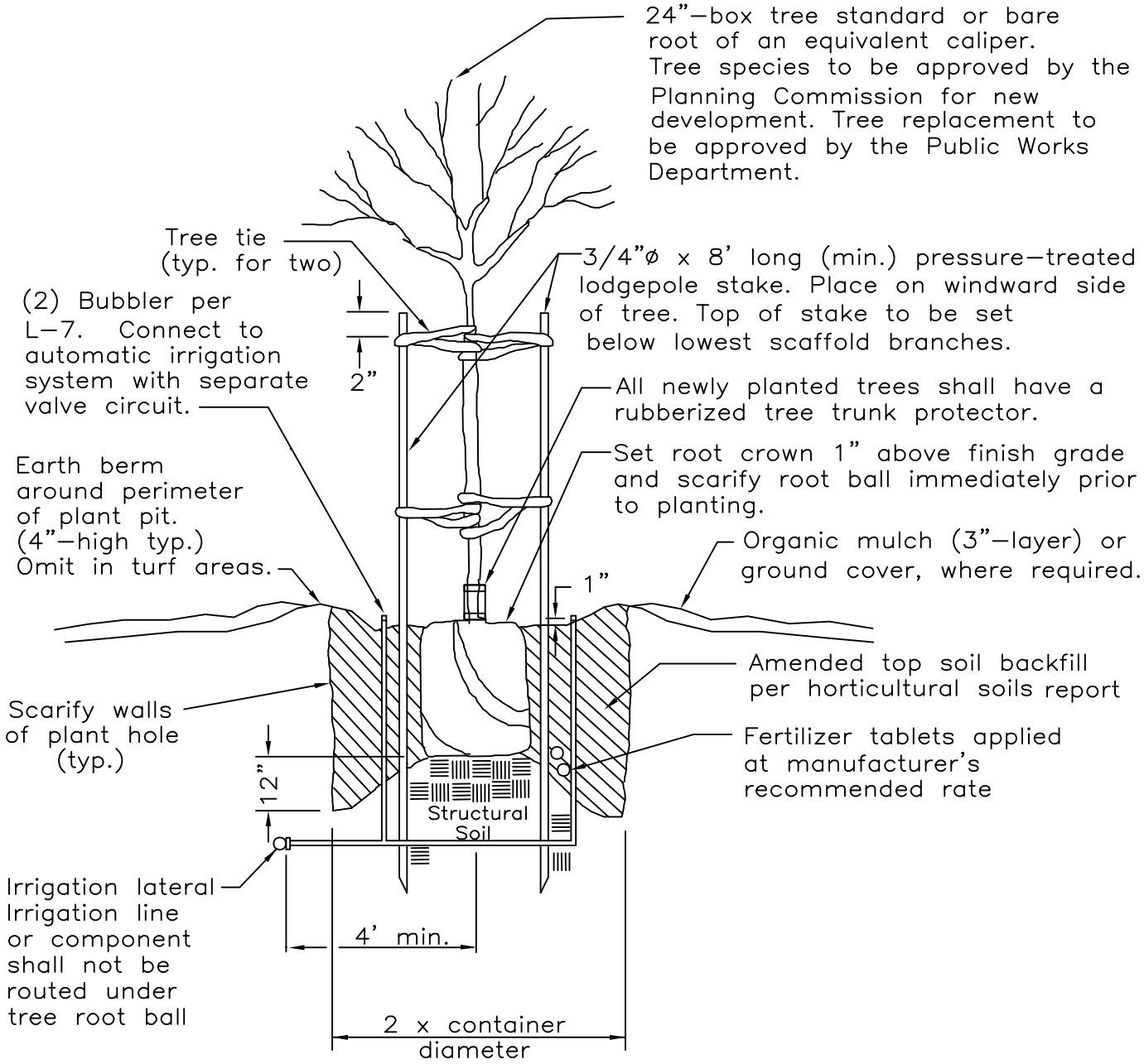

SECTION

NOTES:

1. When tree is located within 6' of sidewalk, curb, or other hard surfacing, plant tree per L–3C.
2. The mulch, if required, shall not be placed in contact with the parent trunk of the tree.

User note:
These details shall be used in conjunction with all the City standard details and specifications. Refer to the City standard specifications for the materials, installation, testing, protective coatings, and other requirements.

Date	By	Rev.
6/23/20	JT	1

L03E.DWG

TREE PLANTING
FOR OPEN AREAS

CITY OF LIVERMORE
STANDARD DETAIL

Dwn: FY/JT	Date: Nov–22	NO.
Ckd: Spec. Committee	Scale: NONE	L–3F

City Engineer

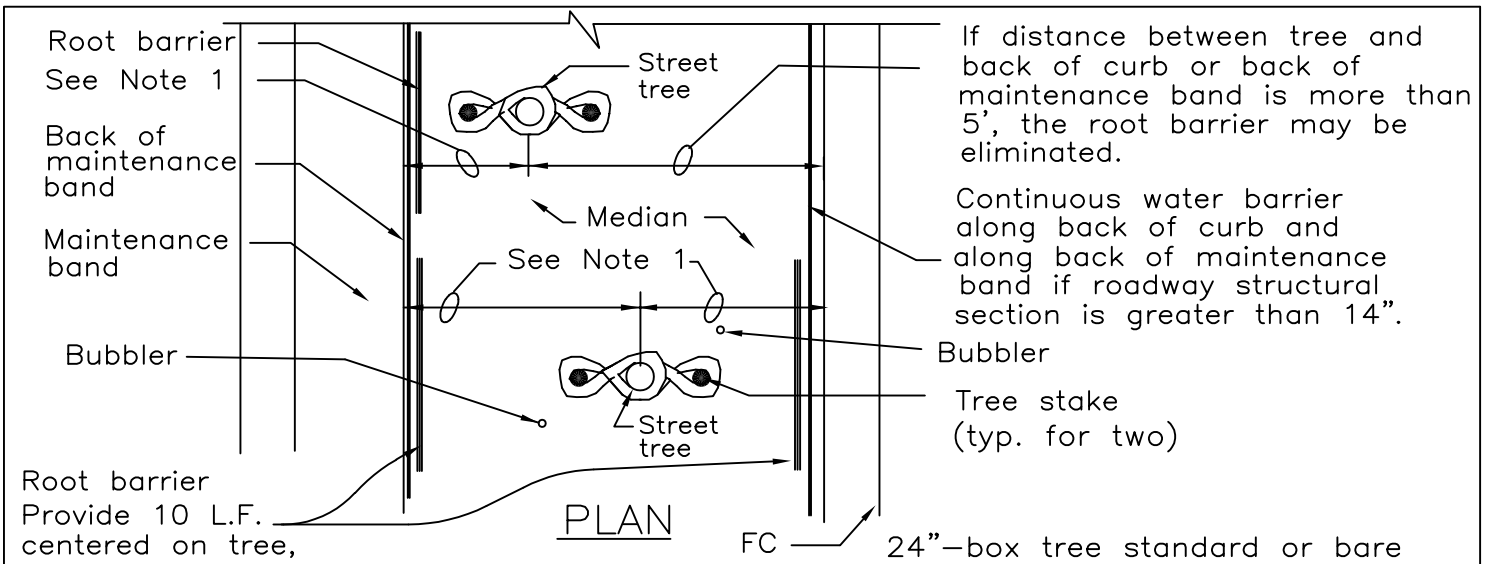

PLAN

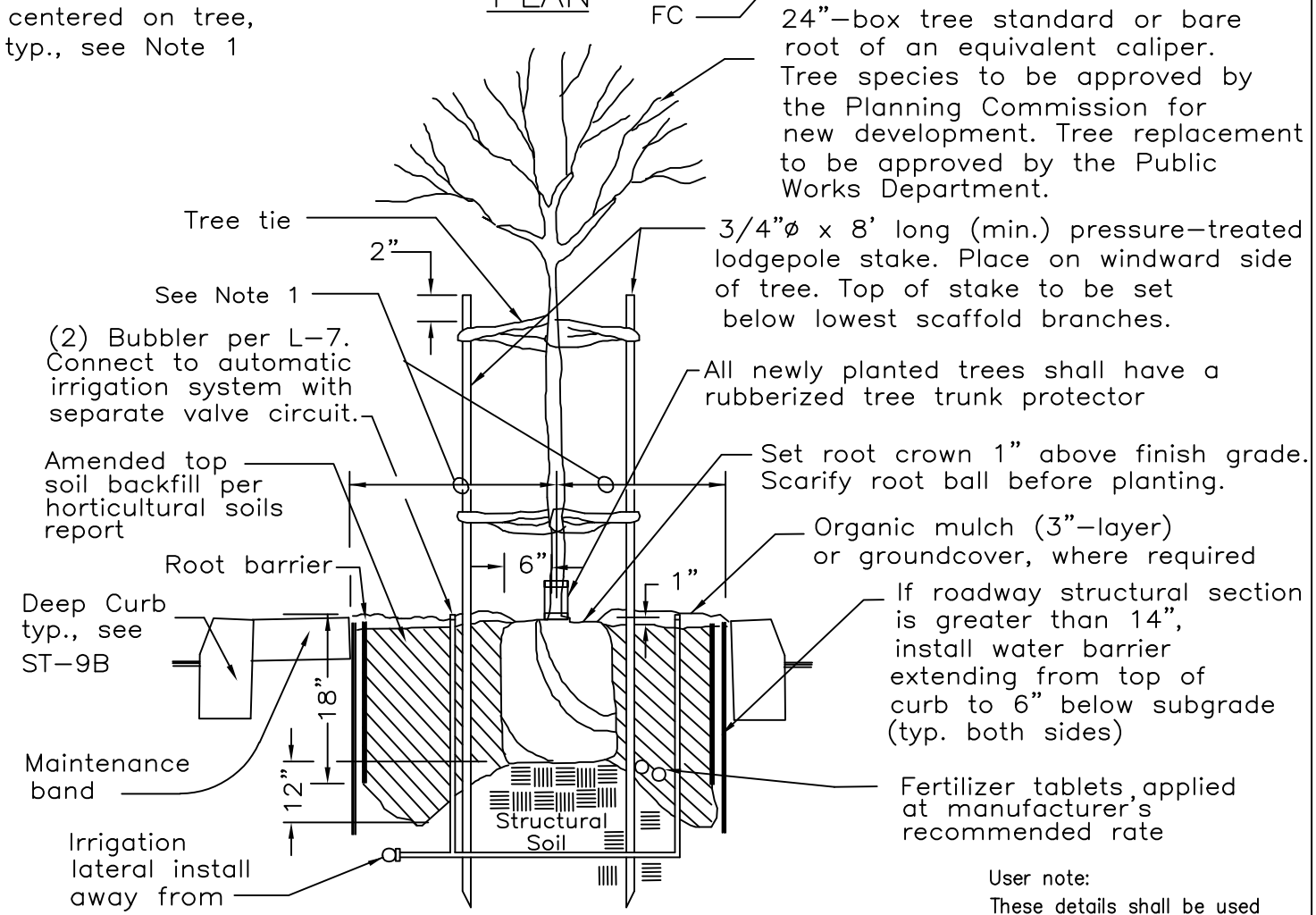

SECTION

User note:
These details shall be used in conjunction with all the City standard details and specifications. Refer to the City standard specifications for the materials, installation, testing, protective coatings, and other requirements.

NOTES:

1) Provide 10 L.F. root barrier if distance is 5' or less.
2) The mulch, if required, shall not be placed within 6" of the trunk of the tree.

Date	By	Rev.
6/23/20	JT	1

STREET TREE PLANTING

FOR MEDIANS

CITY OF LIVERMORE
STANDARD DETAIL

Dwn: FY/JT	Date: Nov–22	NO.
Ckd: Spec. Committee	Scale: NONE	L–3G

City Engineer

L03F.DWG

NOTES:

1. Shrub varieties, quantities, sizes, and spacing are subject to Design Review Committee approval.
2. The mulch, if required, shall not be placed within 6" of parent trunk of the shrub.
3. The shrub hole shall be 12" (min.) deeper and 12" (min.) larger on all sides of the root ball.

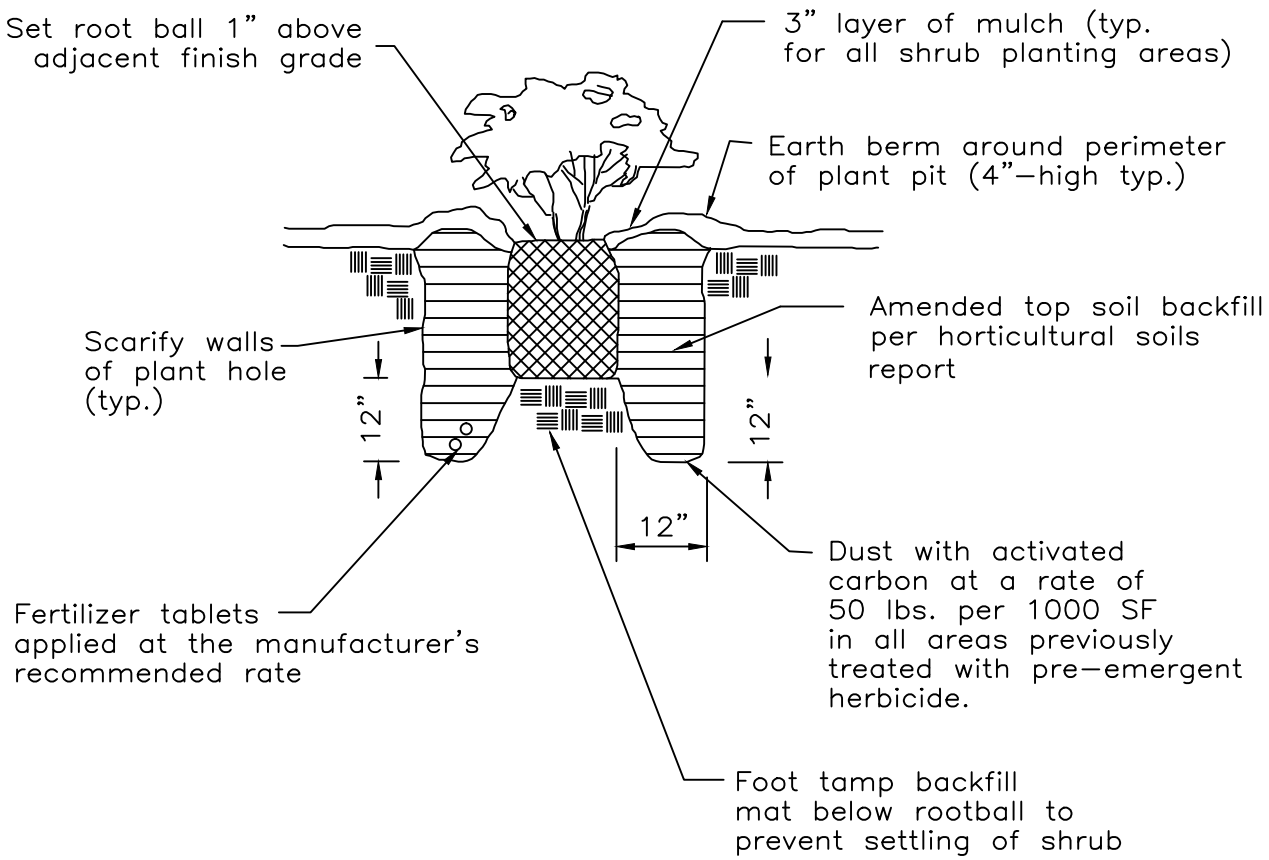

SECTION

User note:
These details shall be used in conjunction with all the City standard details and specifications. Refer to the City standard specifications for the materials, installation, testing, protective coatings, and other requirements.

Date	By	Rev.

SHRUB PLANTING

CITY OF LIVERMORE
STANDARD DETAIL

Dwn: MAS	Date: May–13	NO.
Ckd: Spec. Committee	Scale: NONE	L–4

City Engineer

L04.DWG

NOTES:

1. Groundcover varieties, quantities, sizes, and spacing are subject to Design Review Committee approval.

2. Dust the plant pits with activated carbon at a rate of 50 lbs. per 1000 SF in all areas previously treated with pre–emergent herbicide.

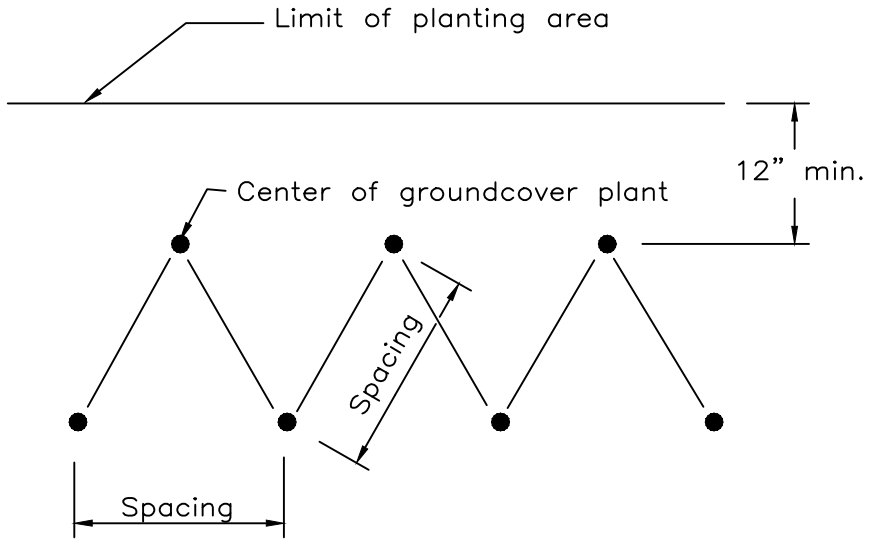

PLAN

User note:
These details shall be used in conjunction with all the City standard details and specifications. Refer to the City standard specifications for the materials, installation, testing, protective coatings, and other requirements.

Date	By	Rev.

GROUNDCOVER SPACING

CITY OF LIVERMORE
STANDARD DETAIL

Dwn: MAS	Date: May–13	NO.
Ckd: Spec. Committee	Scale: NONE	L-5
City Engineer		

L05.DWG

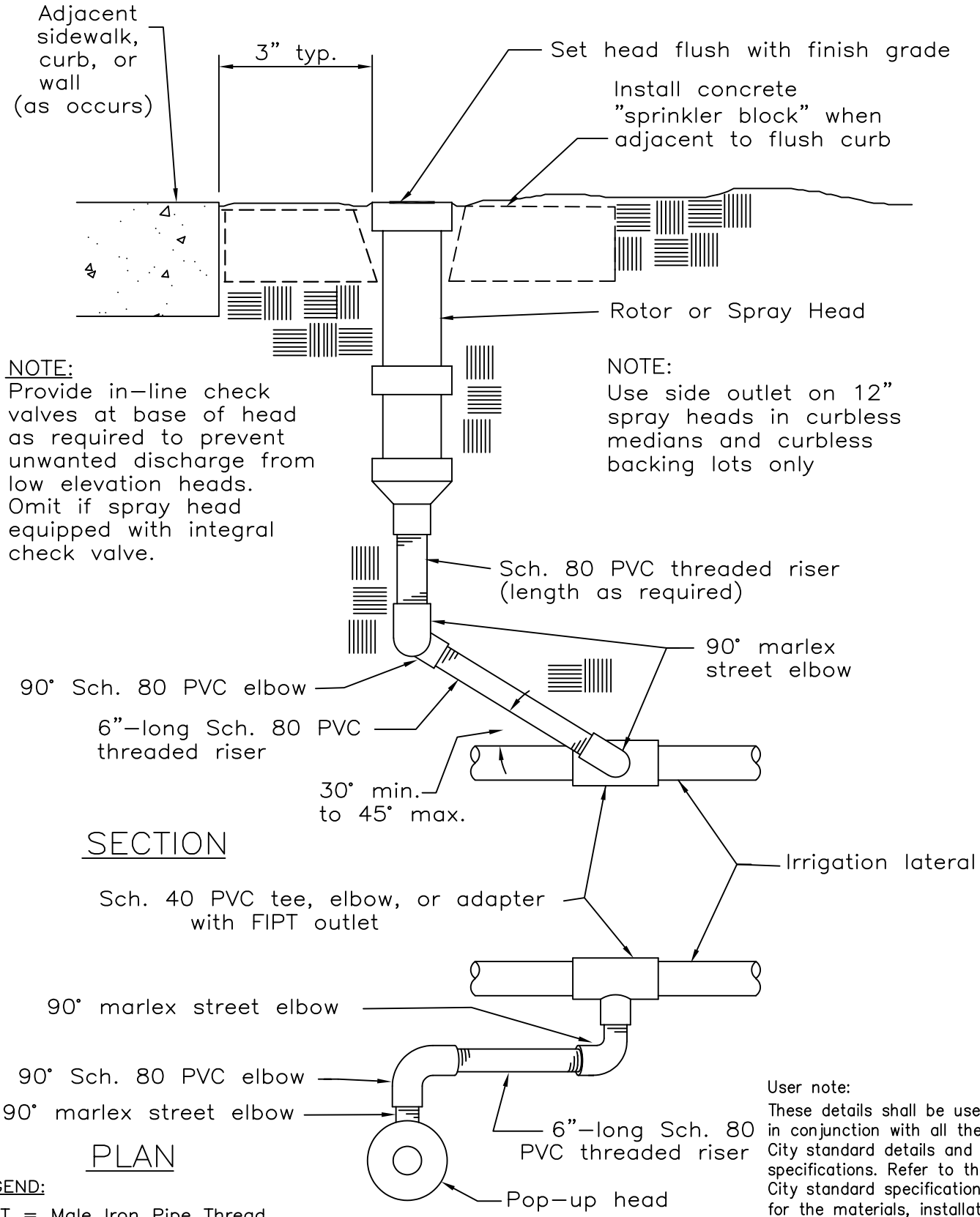

LEGEND:

MIPT = Male Iron Pipe Thread
FIPT = Female Iron Pipe Thread

User note:
These details shall be used in conjunction with all the City standard details and specifications. Refer to the City standard specifications for the materials, installation, testing, protective coatings, and other requirements.

Date	By	Rev.
6/23/20	JT	1

L06.DWG

ROTOR OR SPRAY HEAD

CITY OF LIVERMORE
STANDARD DETAIL

Dwn: MM/JT	Date: Nov-22	NO.
Ckd: Spec. Committee	Scale: NONE	L-6

City Engineer

NOTE:

1. All laterals, mains, and swing joints shall be located 24" min. away from trees or plants.

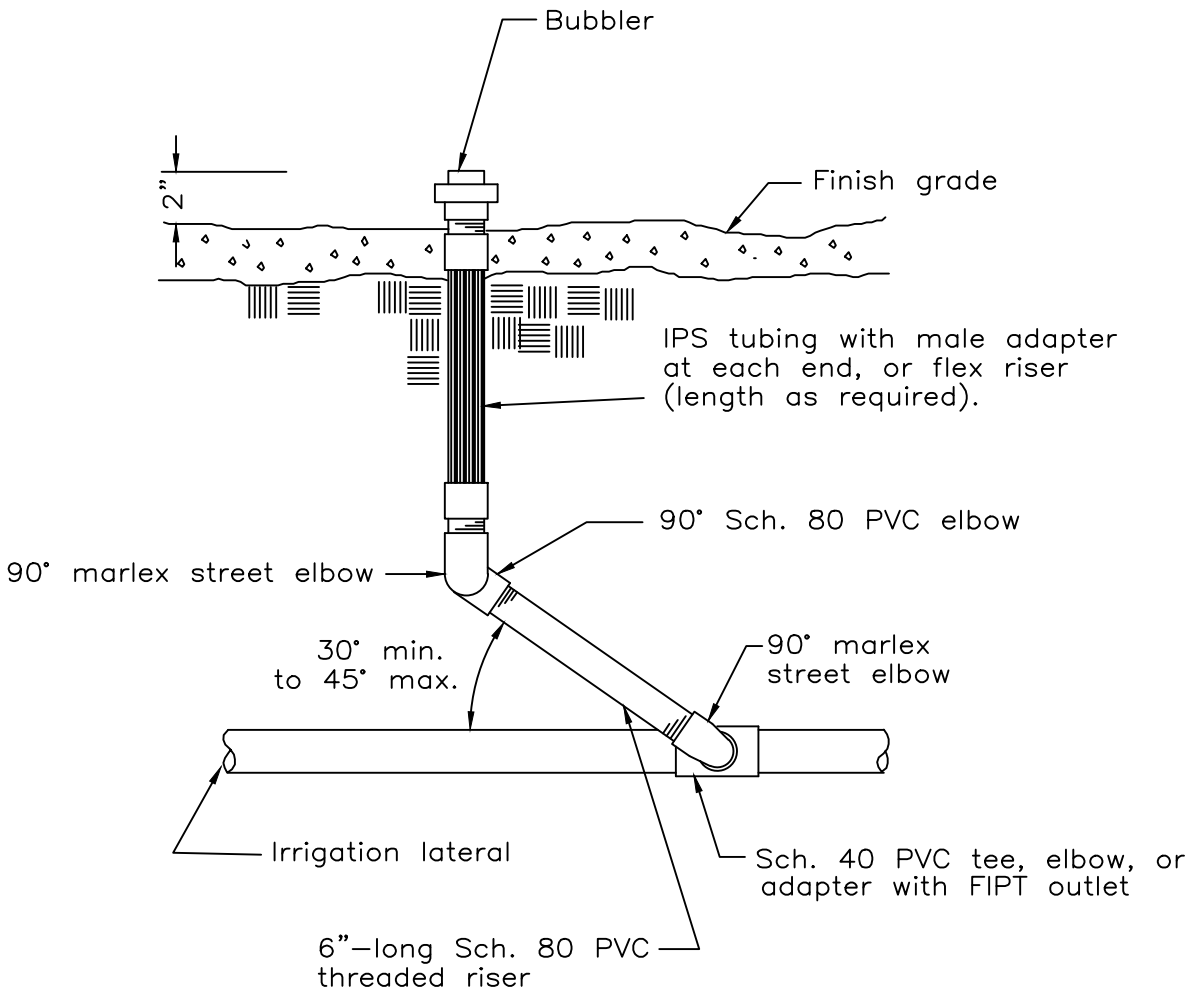

SECTION

User note:
These details shall be used in conjunction with all the City standard details and specifications. Refer to the City standard specifications for the materials, installation, testing, protective coatings, and other requirements.

LEGEND:

MIPT = Male Iron Pipe Thread
FIPT = Female Iron Pipe Thread

Date	By	Rev.

TREE BUBBLER

CITY OF LIVERMORE
STANDARD DETAIL

Dwn:	MAS	Date: May–13	NO.
Ckd:	Spec. Committee	Scale: NONE	L-7

City Engineer

L07.DWG

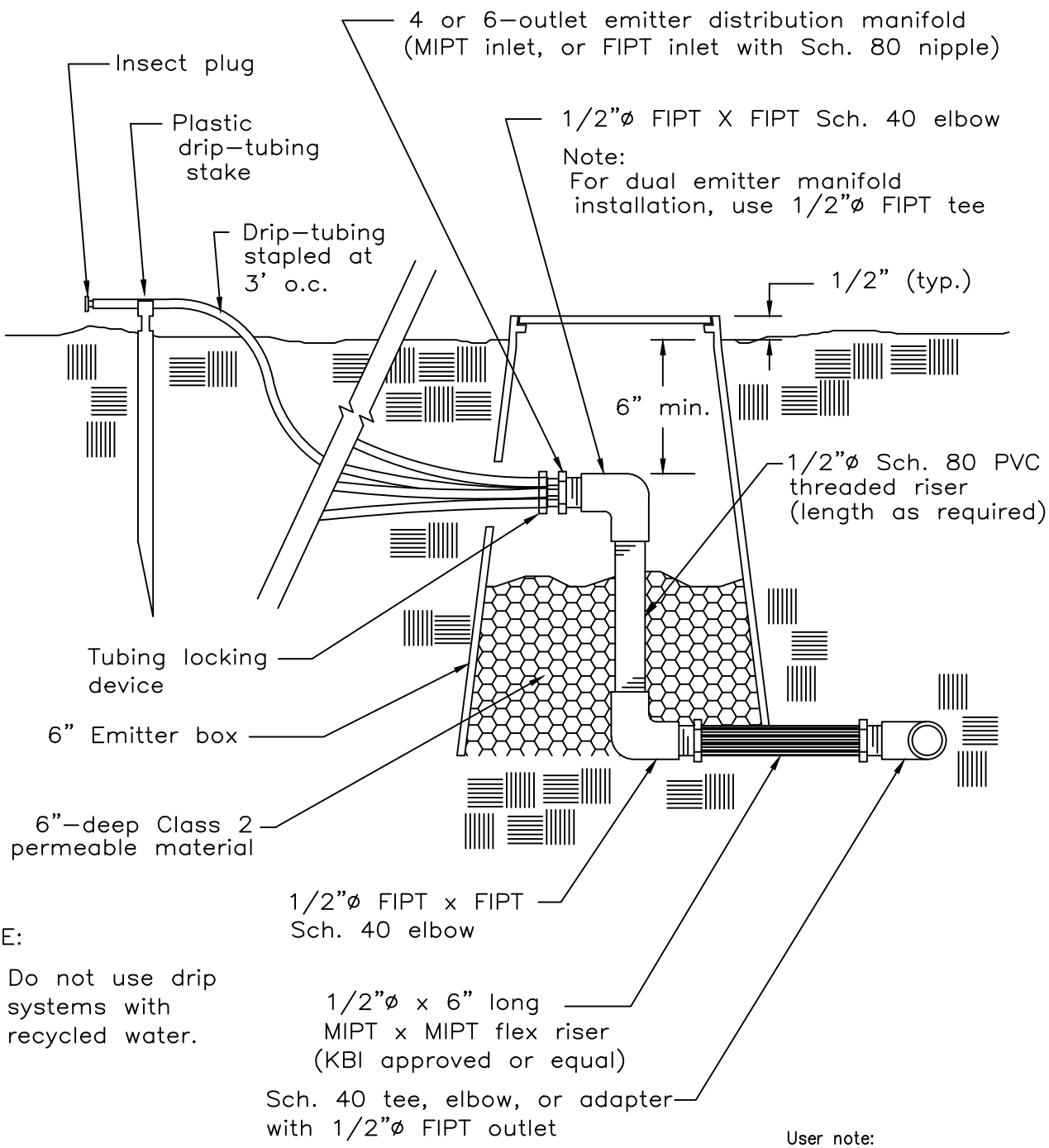

NOTE:

1. Do not use drip systems with recycled water.

SECTION

LEGEND:

MIPT = Male Iron Pipe Thread
FIPT = Female Iron Pipe Thread

User note:
These details shall be used in conjunction with all the City standard details and specifications. Refer to the City standard specifications for the materials, installation, testing, protective coatings, and other requirements.

Date	By	Rev.

DRIP EMITTER

FOUR OR SIX OUTLET

CITY OF LIVERMORE
STANDARD DETAIL

Dwn: MM	Date: May–13	NO.
Ckd: Spec. Committee	Scale: NONE	L–8A
City Engineer		

L08A.DWG

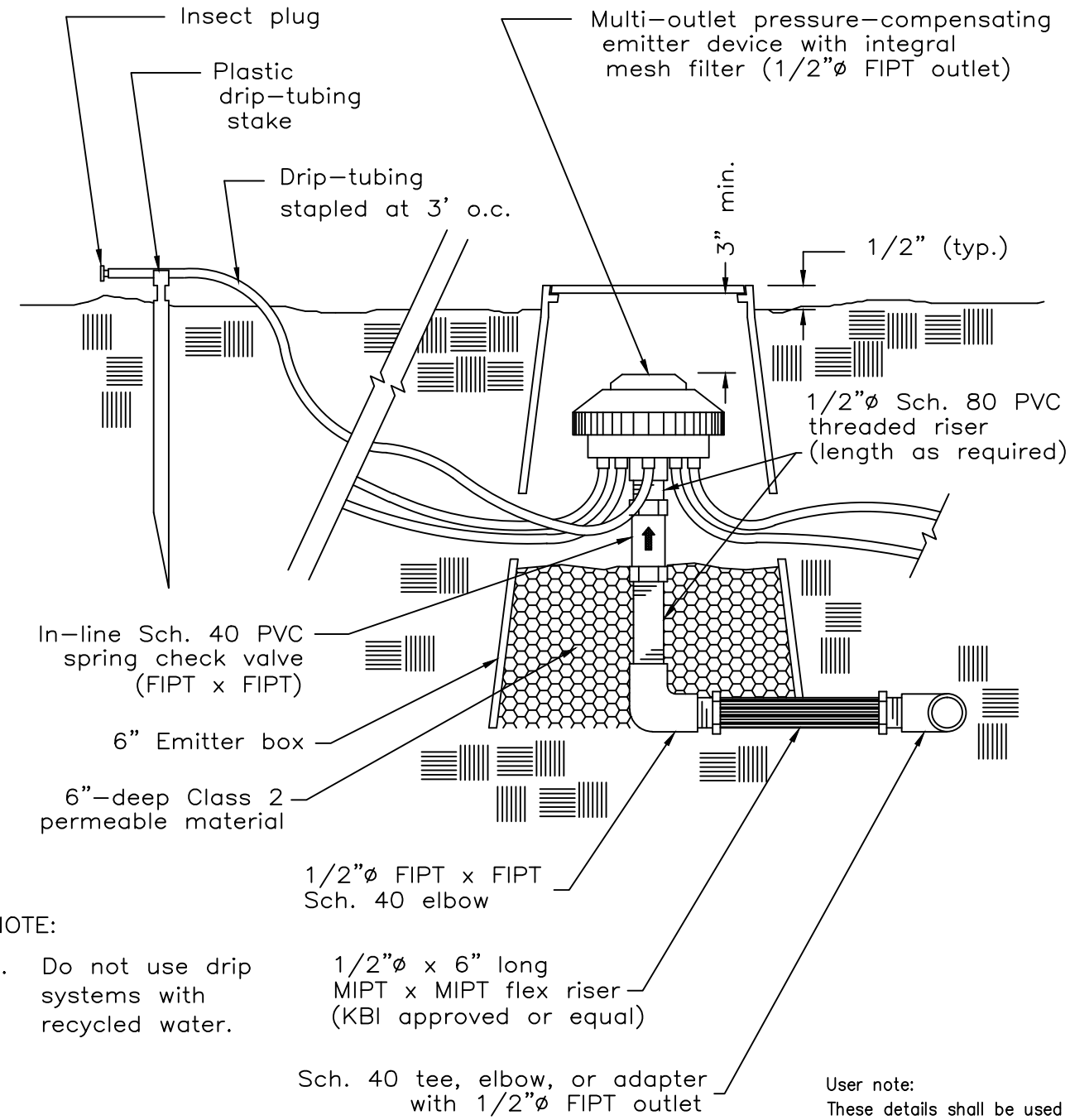

NOTE:

1. Do not use drip systems with recycled water.

SECTION

LEGEND

MIPT = Male Iron Pipe Thread
FIPT = Female Iron Pipe Thread

User note:
These details shall be used in conjunction with all the City standard details and specifications. Refer to the City standard specifications for the materials, installation, testing, protective coatings, and other requirements.

Date	By	Rev.

DRIP EMITTER

MULTI–OUTLET

CITY OF LIVERMORE
STANDARD DETAIL

Dwn: FY	Date: May–13	NO.
Ckd: Spec. Committee	Scale: NONE	L–8B

City Engineer

L08B.DWG

NOTES:

1. Center valve box over remote control valve.
2. Set boxes 1" above finish grade or mulch cover in planting areas and flush with finish grade in turf.
3. Set boxes in ground cover/shrub areas whenever possible. Use concrete boxes in hardsurfaced areas.
4. Set boxes parallel to each other and perpendicular to edge of sidewalk, curb, wall, or hardsurfacing.
5. Avoid heavy compacting of soil around boxes to prevent collapse of box sides.
6. All fittings shown shall be the same size as the valve size specified.

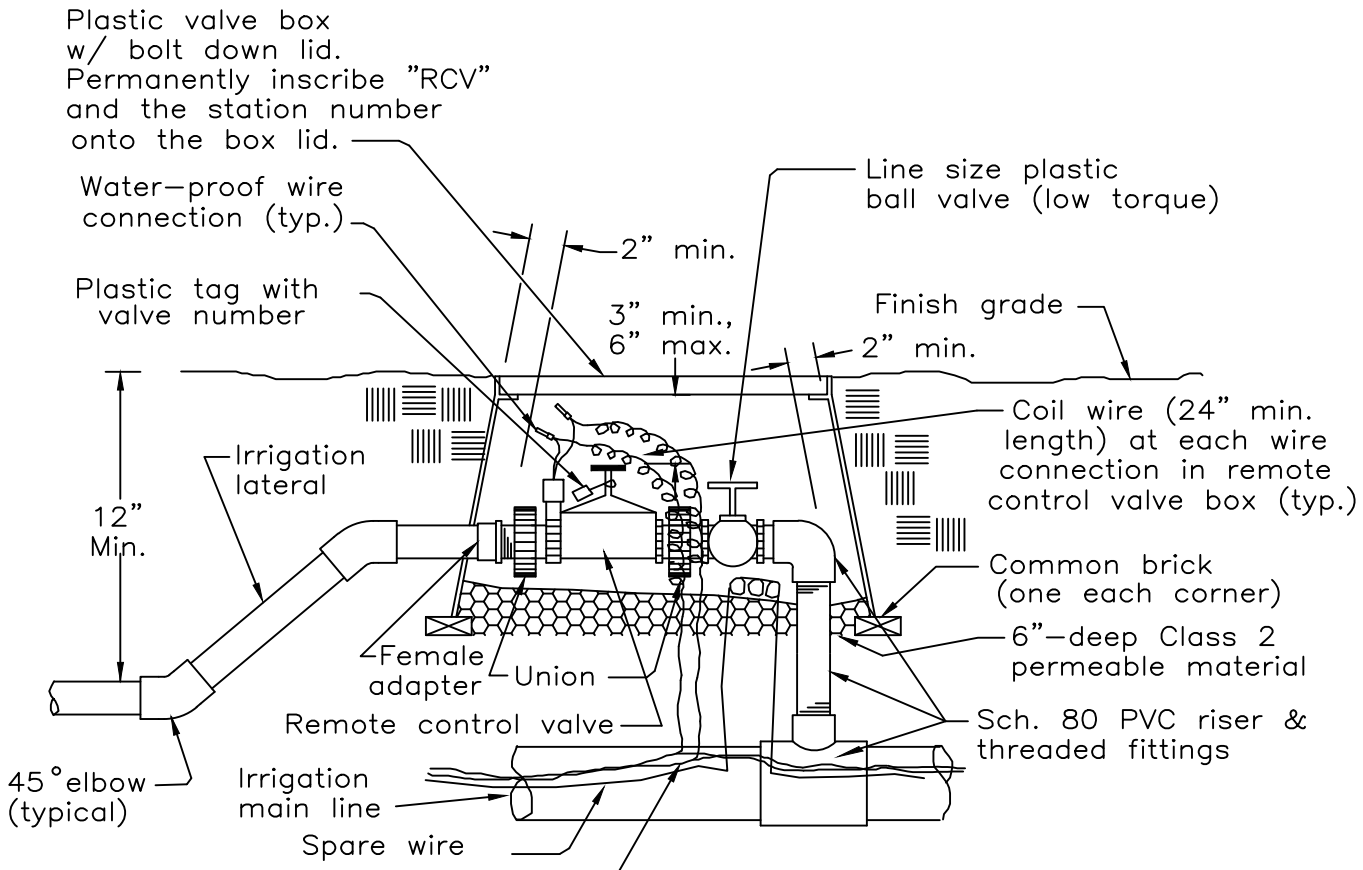

SECTION

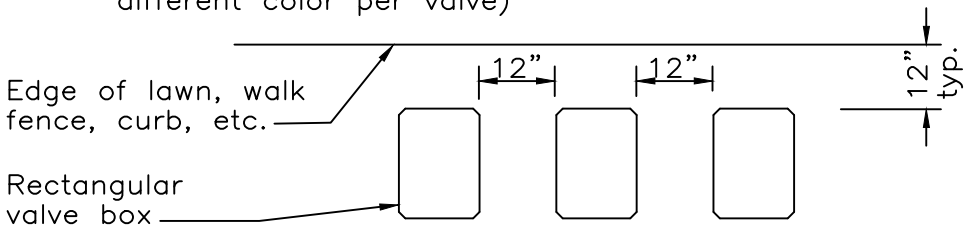

PLAN

User note:
These details shall be used in conjunction with all the City standard details and specifications. Refer to the City standard specifications for the materials, installation, testing, protective coatings, and other requirements.

Date	By	Rev.

REMOTE CONTROL VALVE

STANDARD

CITY OF LIVERMORE
STANDARD DETAIL

Dwn: FY	Date: May-13	NO.
Ckd: Spec. Committee	Scale: NONE	L-9A

City Engineer

L09A.DWG

NOTES:

1. Center valve box over remote control valve.
2. Set boxes 1" above finish grade or mulch cover in planting areas, and flush with finish grade in turf.
3. Set boxes in ground cover/shrub areas whenever possible. Use concrete boxes in hardsurfaced areas.
4. Set boxes parallel to each other and perpendicular to edge of sidewalk, curb, wall, or hardsurfacing.
5. Avoid heavy compacting of soil around boxes to prevent collapse of box sides.
6. All fittings shown shall be the same size as the valve size specified.

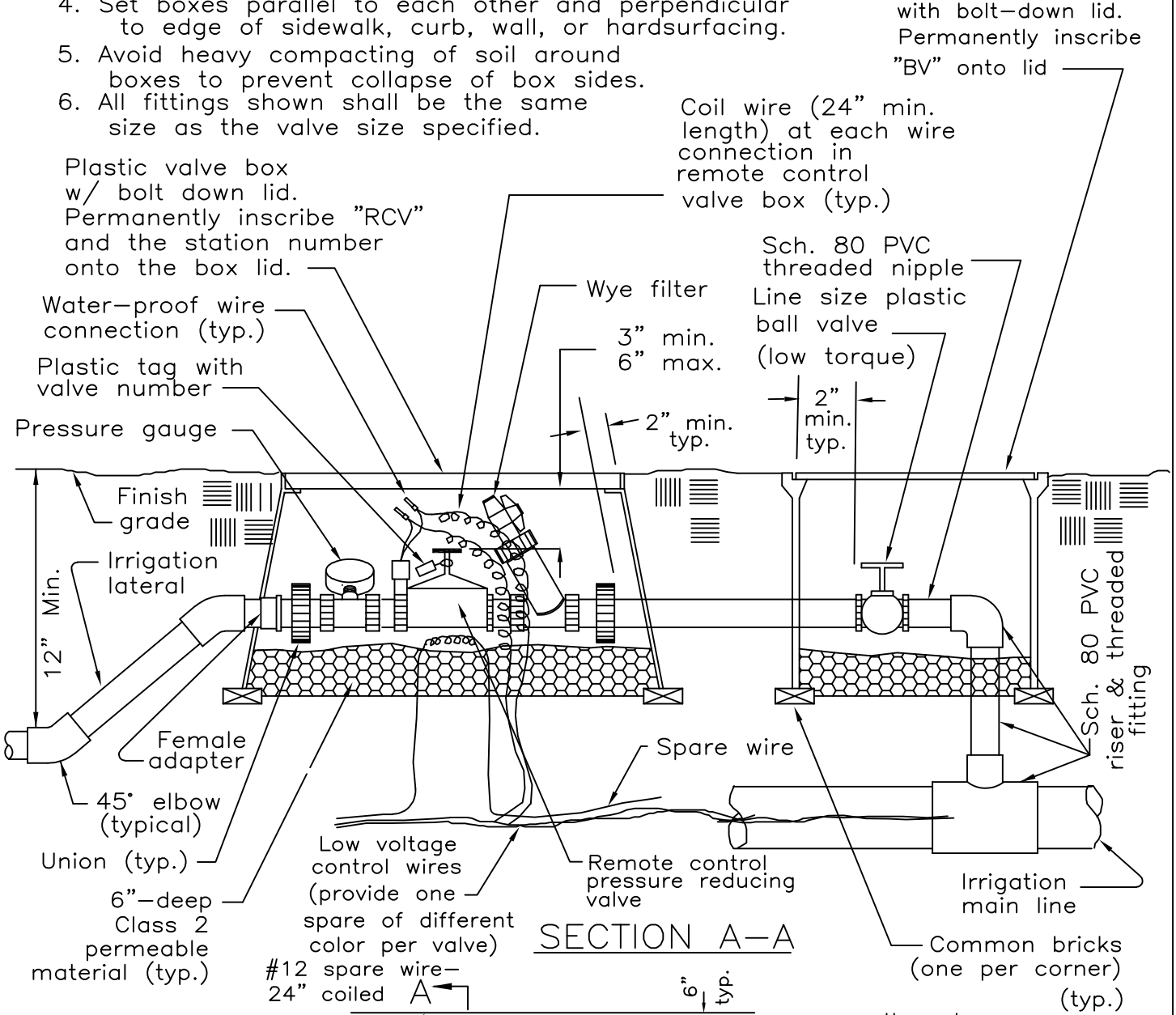

User note:
These details shall be used in conjunction with all the City standard details and specifications. Refer to the City standard specifications for the materials, installation, testing, protective coatings, and other requirements.

Date	By	Rev.

REMOTE CONTROL VALVE

DRIP IRRIGATION SYSTEMS

CITY OF LIVERMORE
STANDARD DETAIL

Dwn: FY-HI	Date: Apr-23	NO.
Ckd: Spec. Committee	Scale: NONE	L-9B

City Engineer

L09B.DWG

NOTES:

1. Center valve box over remote control valve.
2. Set boxes 1" above finish grade or mulch cover in planting areas and flush with finish grade in turf.
3. Set boxes in ground cover/shrub areas whenever possible. Use concrete boxes in hardsurfaced areas.
4. Set box perpendicular to edge of sidewalk, curb, wall, or hardsurfacing.
5. Avoid heavy compacting of soil around box to prevent collapse of box sides.
6. All fittings shown shall be the same size as the valve size specified.

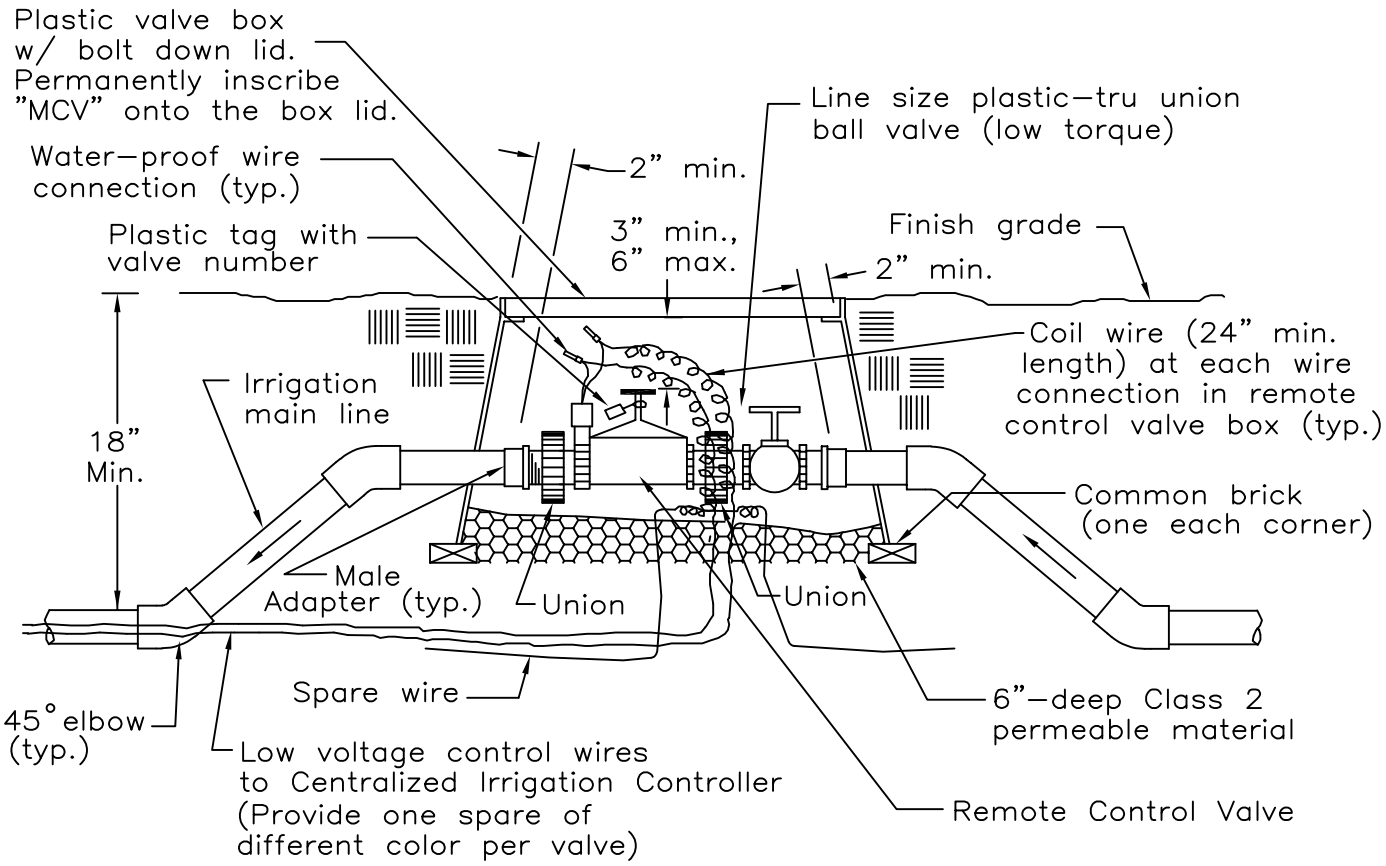

SECTION

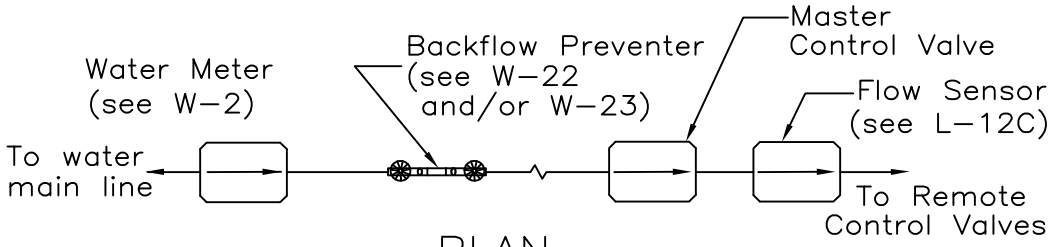

PLAN

User note:
These details shall be used in conjunction with all the City standard details and specifications. Refer to the City standard specifications for the materials, installation, testing, protective coatings, and other requirements.

Date	By	Rev.

MASTER CONTROL VALVE

FOR CENTRALIZED IRRIGATION SYSTEMS

CITY OF LIVERMORE
STANDARD DETAIL

Dwn: FY/HI	Date: Mar-23	NO.
Ckd: Spec. Committee	Scale: NONE	L-9C

City Engineer

L09C.DWG

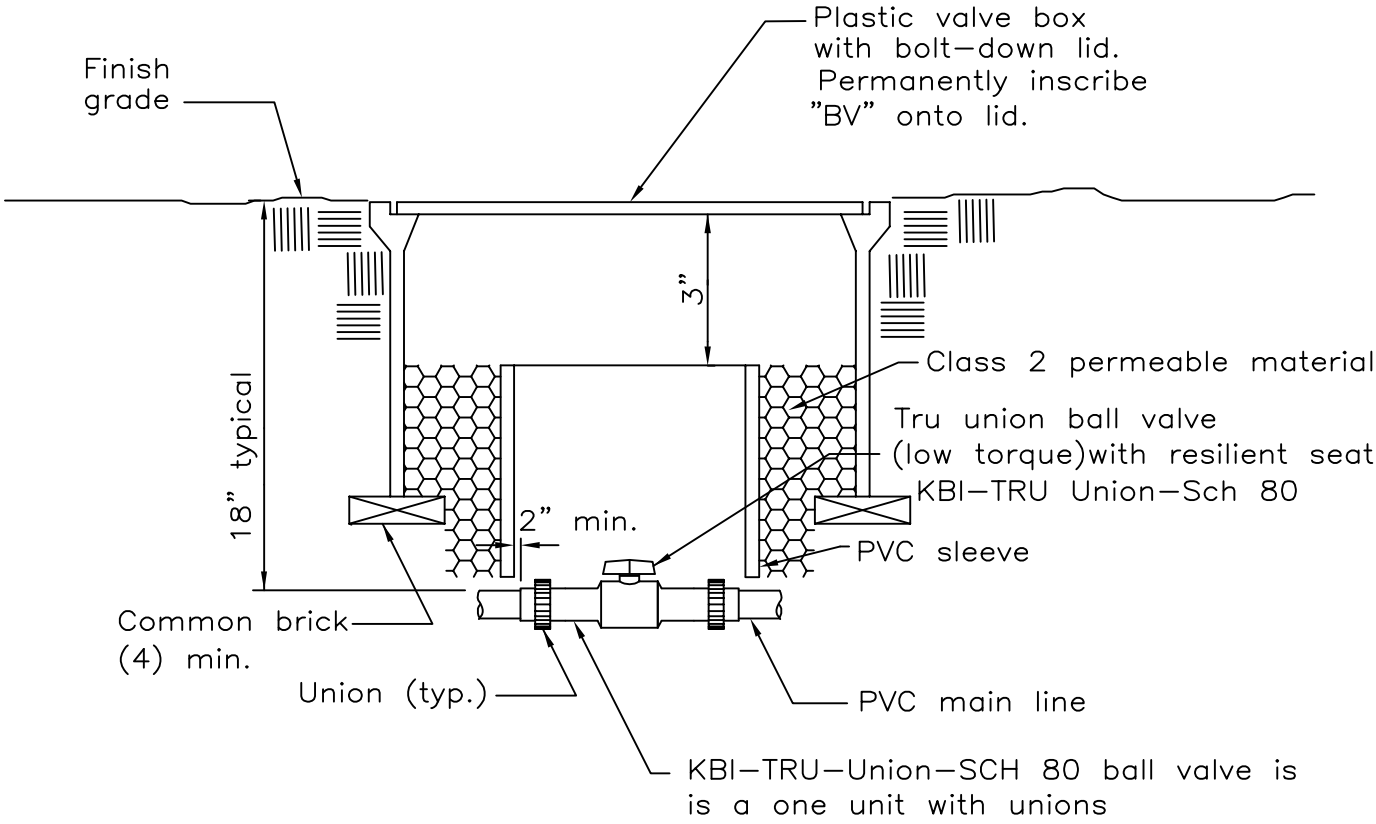

SECTION

NOTE:

Add a box and sleeve large enough to enclose the ball valve and union.

User note:
These details shall be used in conjunction with all the City standard details and specifications. Refer to the City standard specifications for the materials, installation, testing, protective coatings, and other requirements.

Date	By	Rev.
4/19/23	HI	2
3/4/20	JT	1

L10.DWG

TRU UNION BALL VALVE

CITY OF LIVERMORE
STANDARD DETAIL

Dwn: MM-HI	Date: Apr-23	NO.
Ckd: Spec. Committee	Scale: NONE	L-10

City Engineer

NOTE: Set boxes 1" above finish grade or mulch cover in planting areas, and flush with finish grade in turf areas.

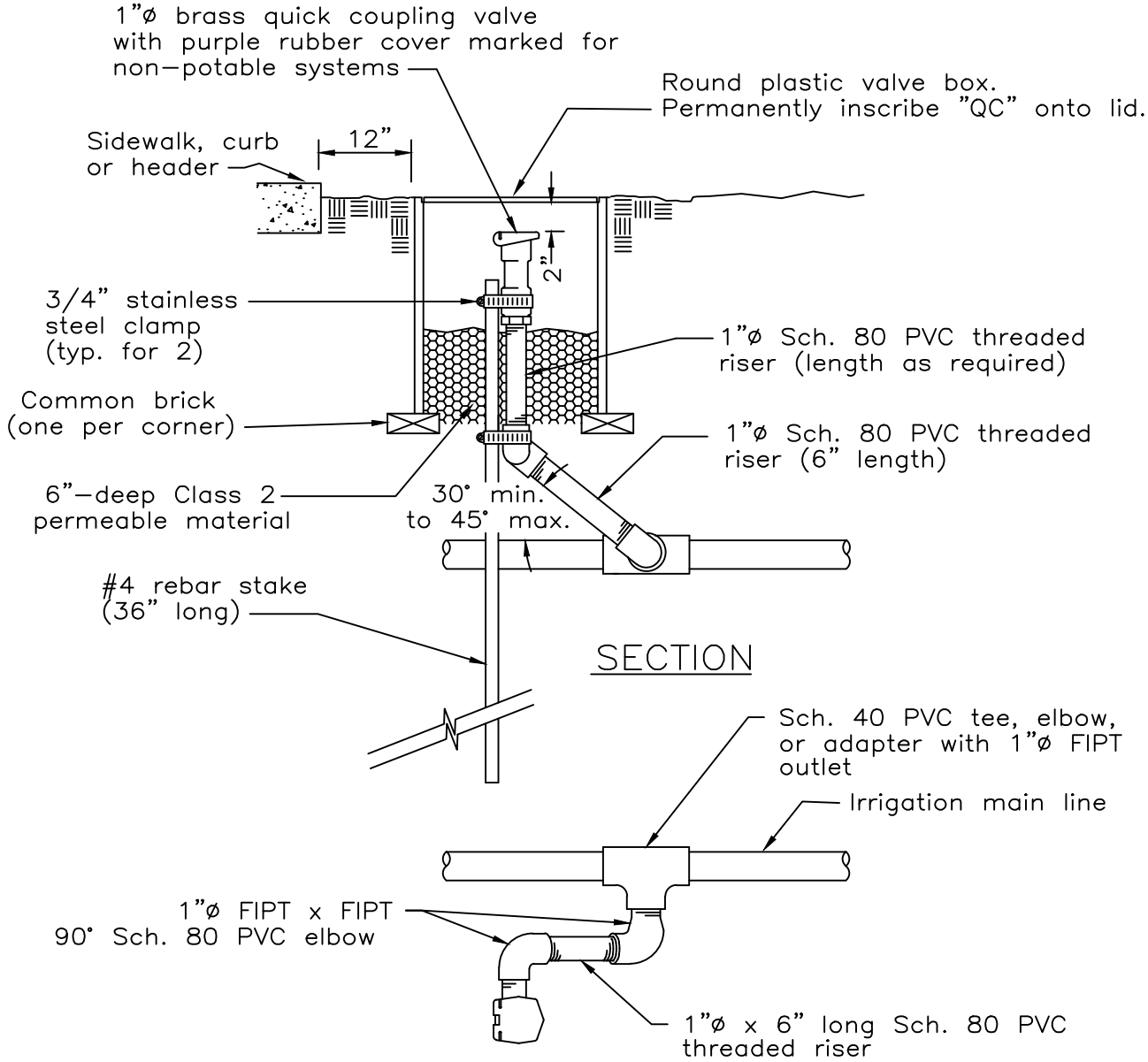

User note:
These details shall be used in conjunction with all the City standard details and specifications. Refer to the City standard specifications for the materials, installation, testing, protective coatings, and other requirements.

LEGEND:

MIPT = Male Iron Pipe Thread
FIPT = Female Iron Pipe Thread

Date	By	Rev.

QUICK COUPLING VALVE

CITY OF LIVERMORE
STANDARD DETAIL

Dwn: DMc	Date: May-13	NO.
Ckd: Spec. Committee	Scale: NONE	L-11

City Engineer

L11.DWG

Note:
All electrical service components shall be U.L. listed and installed per National Electric Code requirements.

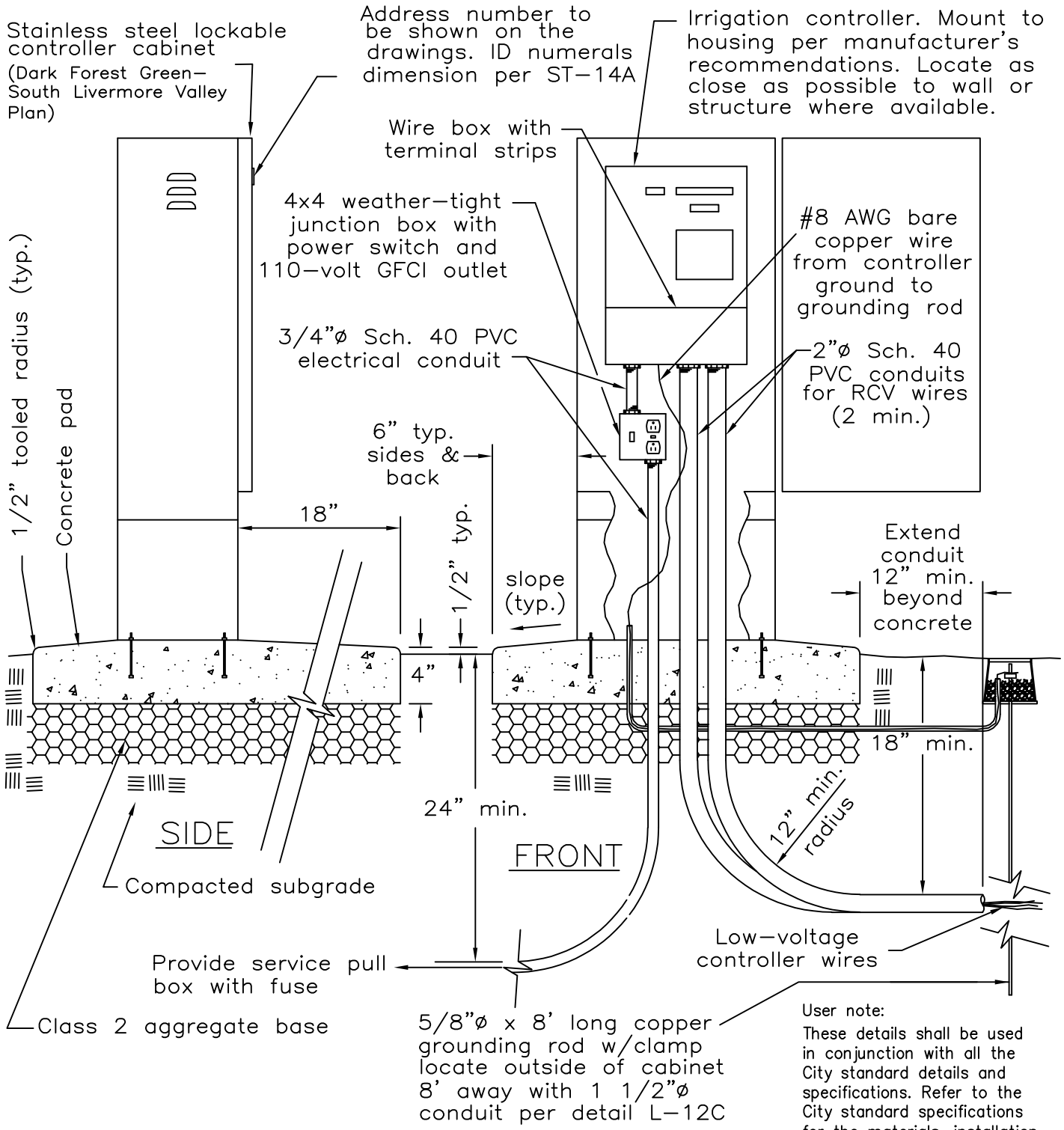

User note:
These details shall be used in conjunction with all the City standard details and specifications. Refer to the City standard specifications for the materials, installation, testing, protective coatings, and other requirements.

Date	By	Rev.

CONTROLLER

STANDARD

CITY OF LIVERMORE
STANDARD DETAIL

Dwn: MM–HI	Date: Apr–23	NO.
Ckd: Spec. Committee	Scale: NONE	L–12A

City Engineer

L12A.DWG

Notes:

1. All electrical service components shall be U.L. listed and installed per National Electric Code requirements.
2. Provide dome antenna only if clear reception can be established between the controller and the City Maintenance Service Center, 3500 Robertson Park Road. Otherwise, provide a high-gain antenna per L-12E.
3. Address numbers as shown on the drawings. ID numerals dimensions per ST-14A

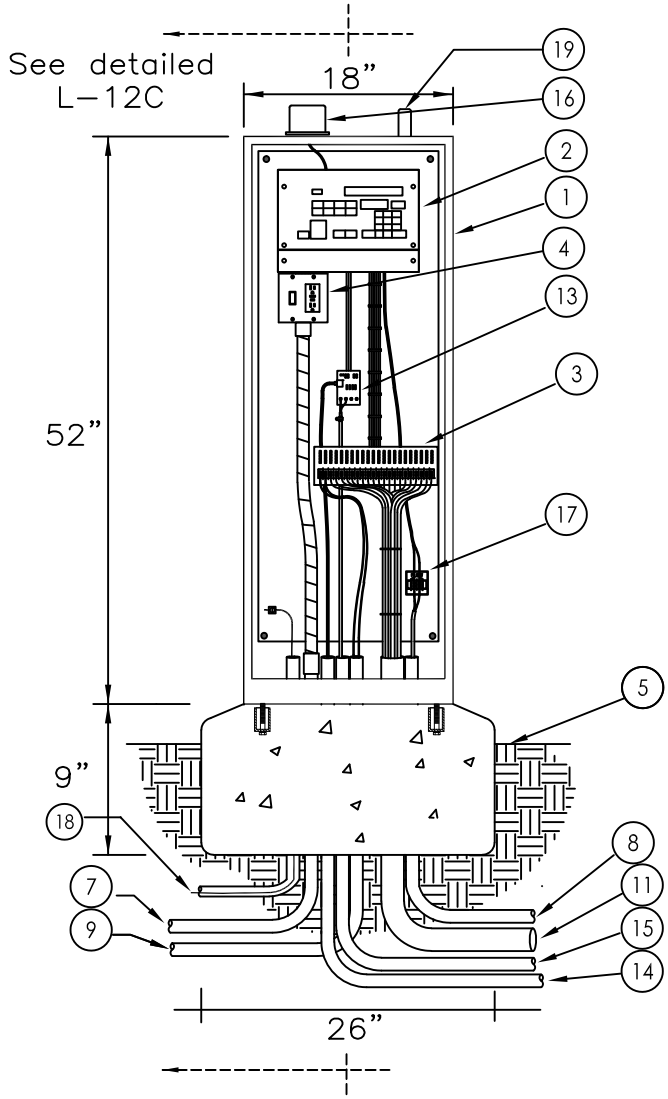

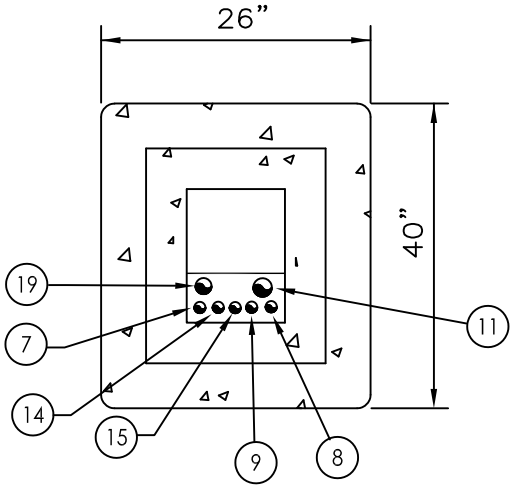

1. Strongbox stainless steel NEMA 3R rainproof enclosure (UL listed).
2. Satellite assembly. Rain Master DX3 and DXi controller.
3. Terminal strip for valve wires.
4. Power switch/GFCI receptacle.
5. Finished grade.
6. 12" diam plastic box with lid permanently inscribed "ground rod" filled with 6" deep class 2 permeable material.
7. 120VAC electrical power run in 1" PVC conduit to controller side from electrical meter.
8. 1" conduit and sweep ell for flow sensor cables.
9. 1" conduit and sweep ell for master valve cables.
10. 5/8" x 8' ground rod with #6 ground wire and clamp.
11. PVC conduit and sweep ell for lead wire. (Size as required)
12. Utility underground service conduit. Size per code.
13. PHB-phone hardwire board.
14. 1"conduit and sweep ell for phone cable
15. 1"conduit and sweep ell for EV-CAB-COM (out).
16. PMR-CAC-Permanent mount receiver, antenna.
17. EV-CAB-SEN-Flow sensor cable.
18. 1 1/2" conduit sweep for ground rod
19. Ext. Antenna for cell communication

Date	By	Rev.
3/15/23	HI	2
6/23/20	JT	1

L12B.DWG

FRONT VIEW CONTROLLER

FOR CENTRALIZED IRRIGATION SYSTEMS

CITY OF LIVERMORE
STANDARD DETAIL

Dwn: FY/JT/HI	Date: Mar-23	NO.
Ckd: Spec. Committee	Scale: NONE	L-12B

City Engineer

Notes:

1. All electrical service components shall be U.L. listed and installed per National Electric Code requirements.
2. Provide dome antenna only if clear reception can be established between the controller and the City Maintenance Service Center, 3500 Robertson Park Road. Otherwise, provide a high-gain antenna per L-12E.
3. Address numbers as shown on the drawings. ID numerals dimensions per ST-14A

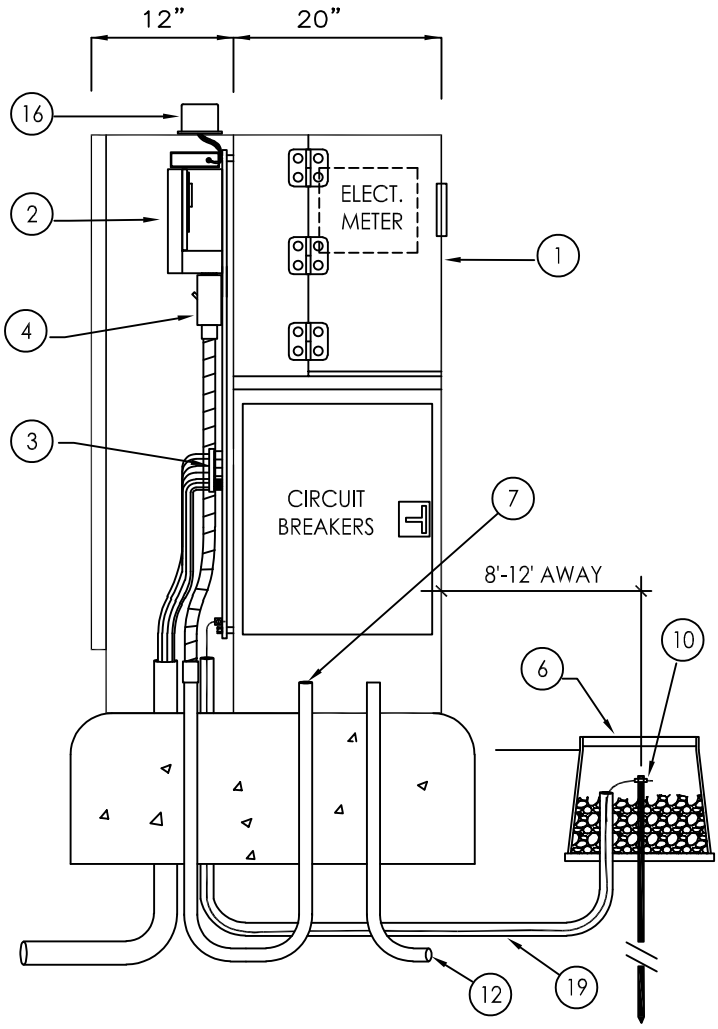

(1) Strongbox stainless steel NEMA 3R rainproof enclosure (UL listed).

(2) Satellite assembly. Rain Master DX3 and DXi controller.

(3) Terminal strip for valve wires.

(4) Power switch/GFCI receptacle.

(6) 12" diam plastic box with lid permanently inscribed "ground rod" filled with 6" deep class 2 permeable material.

(7) 120VAC electrical power run in 1" PVC conduit to controller side from electrical meter.

(10) 5/8" x 8' ground rod with #6 ground wire and clamp.

(12) Utility underground service conduit. Size per code.

(16) PMR-CAC-Permanent mount receiver, antenna.

(19) 1 1/2" conduit sweep for ground rod

Date	By	Rev.
3/15/23	HI	2
6/23/20	JT	1

L12C.DWG

SIDE VIEW CONTROLLER

FOR CENTRALIZED IRRIGATION SYSTEMS

CITY OF LIVERMORE
STANDARD DETAIL

Dwn: FY/JT/HI	Date: Mar-23	NO.
Ckd: Spec. Committee	Scale: NONE	L-12C

City Engineer

NOTES:

1. The flow sensor cable shall be continuous between the controller and the flow sensor box (no intermediate splices).
2. Set box 1" above finish grade or mulch cover in planting areas, or flush with finish grade in turf areas.
3. Set box in ground cover or shrub areas whenever possible. Use equivalent–sized concrete box in sidewalk area.
4. Avoid heavy compacting of soil around box to prevent collapse of box sides.
5. Flow sensor fuse to be installed in the controller cabinet.
6. Loop 24" extra flow sensor cable– inside box.

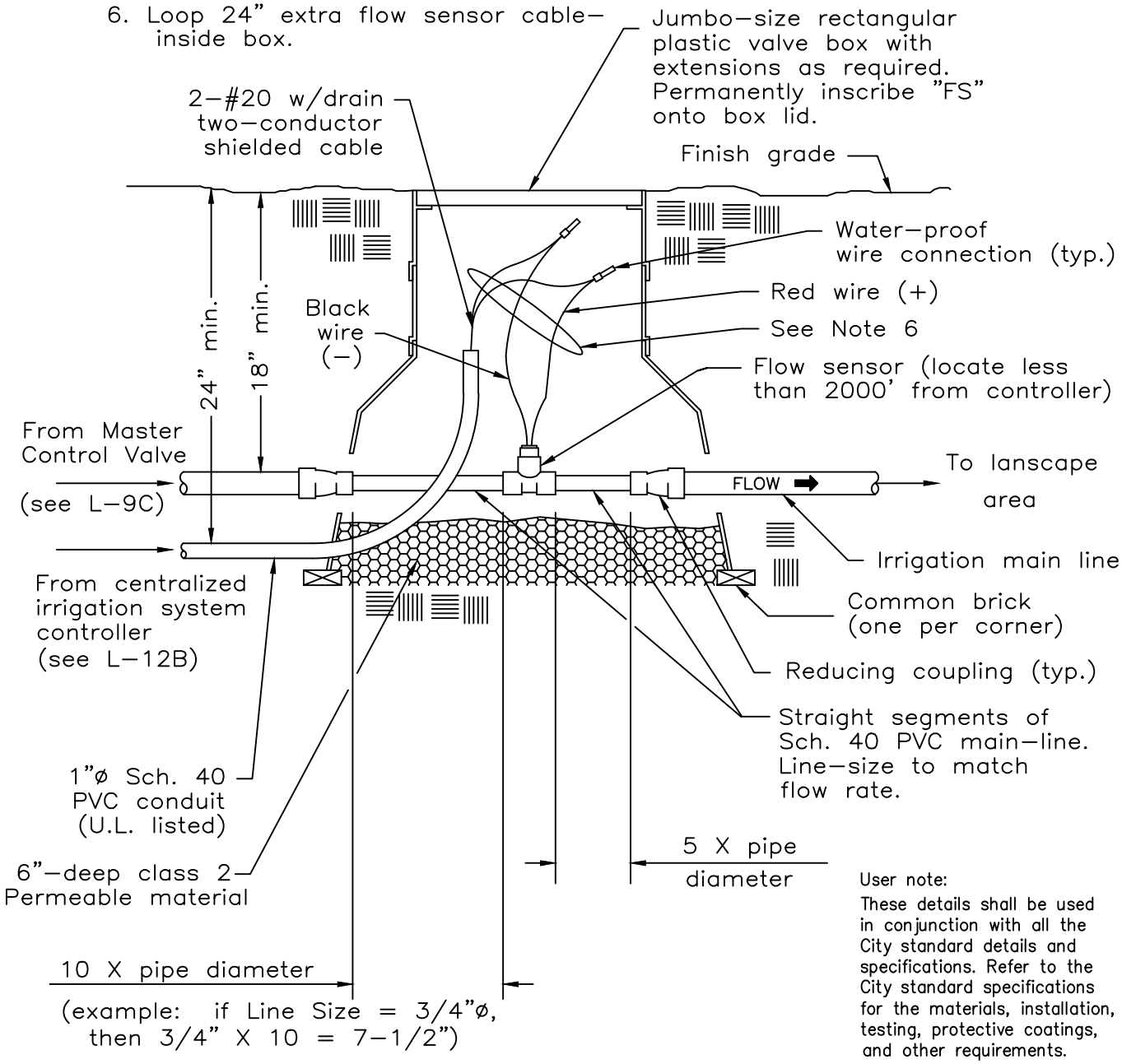

User note:
These details shall be used in conjunction with all the City standard details and specifications. Refer to the City standard specifications for the materials, installation, testing, protective coatings, and other requirements.

Date	By	Rev.

FLOW SENSOR

FOR CENTRALIZED IRRIGATION SYSTEMS

CITY OF LIVERMORE
STANDARD DETAIL

Dwn: FY	Date: May–13	NO.
Ckd: Spec. Committee	Scale: NONE	L–12D
City Engineer		

L12D.DWG

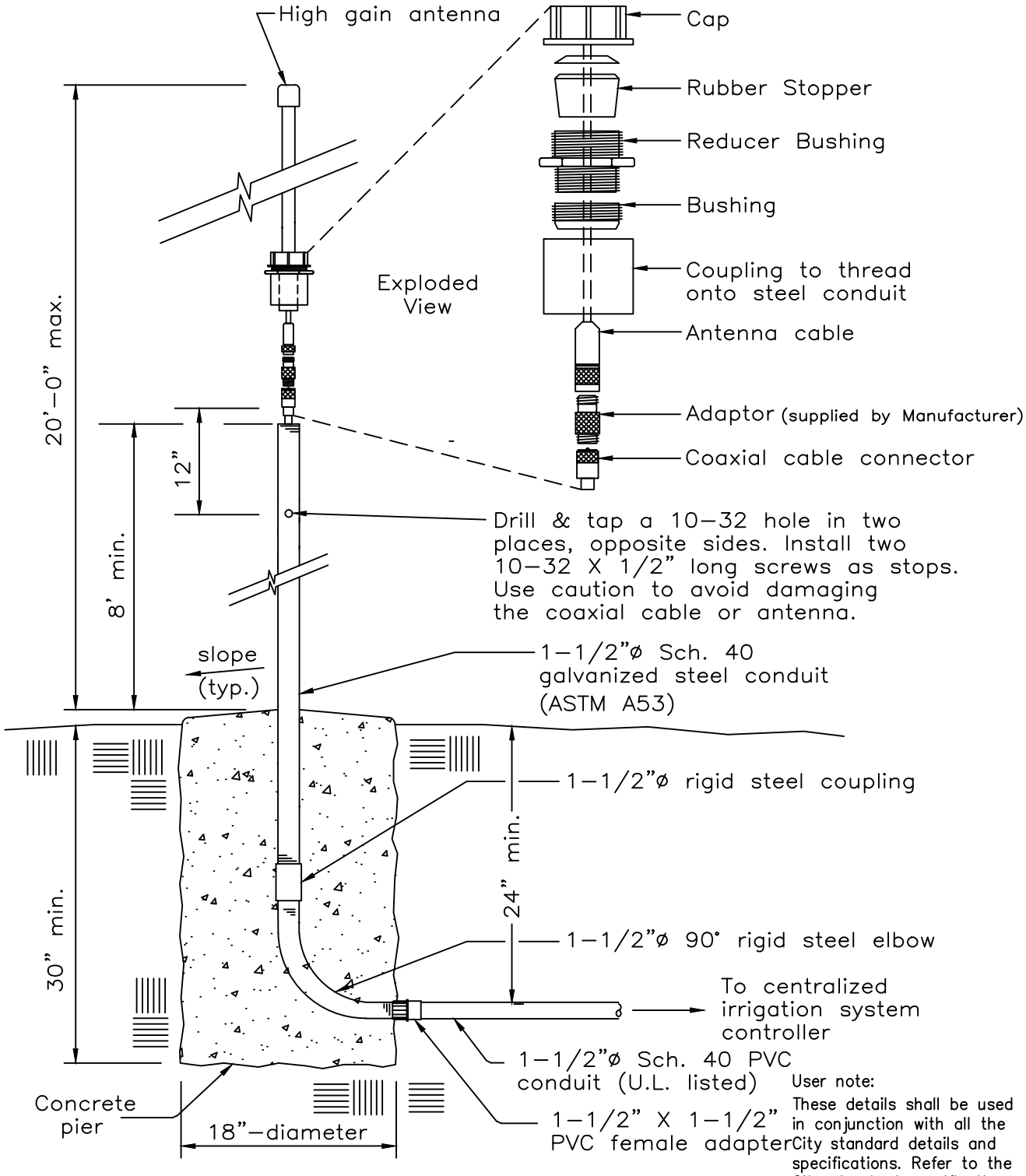

NOTE: Coordinate final location and height with the Engineering Division prior to installation.

SECTION

User note:
These details shall be used in conjunction with all the City standard details and specifications. Refer to the City standard specifications for the materials, installation, testing, protective coatings, and other requirements.

Date	By	Rev.

HIGH-GAIN ANTENNA
FOR CENTRALIZED IRRIGATION SYSTEMS

CITY OF LIVERMORE
STANDARD DETAIL

Dwn: FY	Date: May-13	NO.
Ckd: Spec. Committee	Scale: NONE	L-12E
City Engineer		

L12E.DWG

NOTE:
Install main line per manufacturer's installation guide. Size of concrete thrust blocks shall be per pipe manufacturer's installation guide.

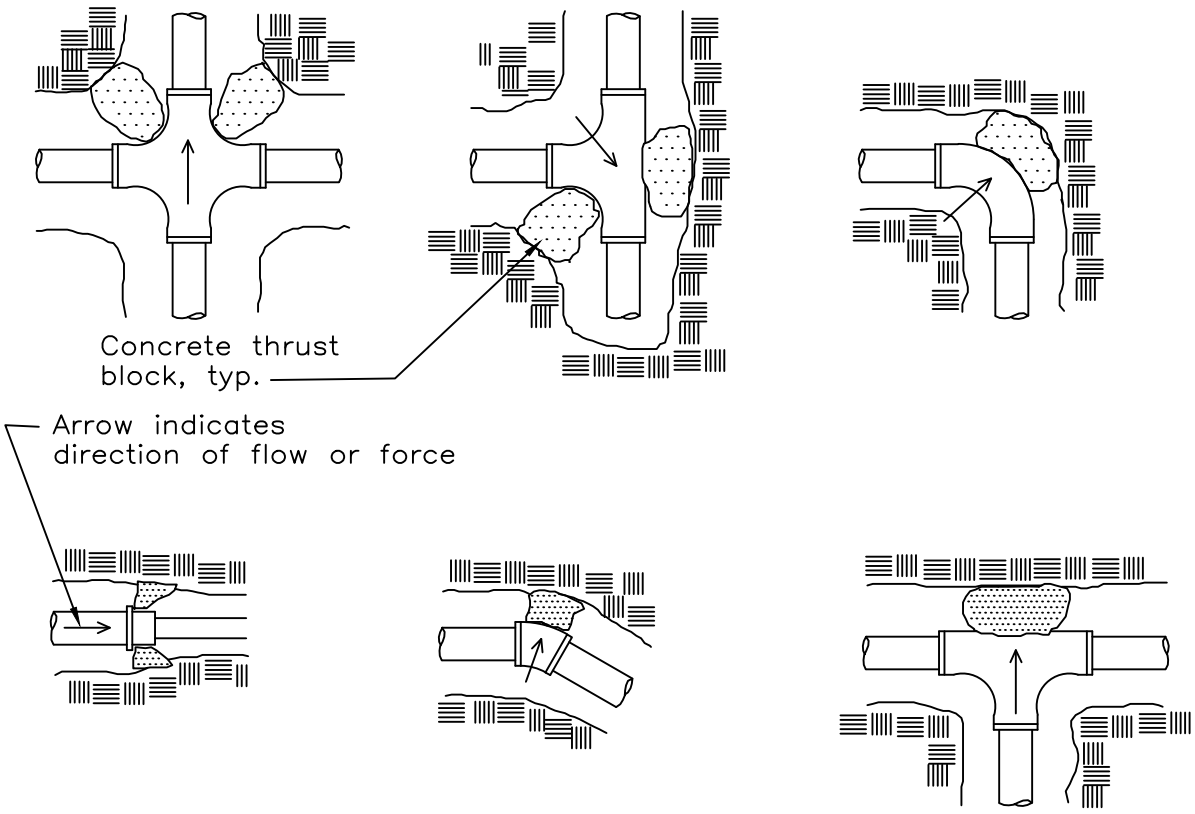

PLAN

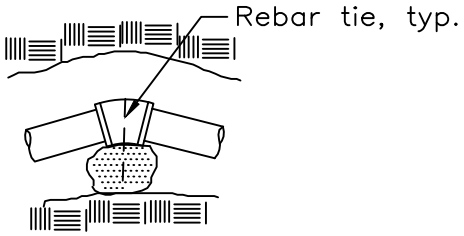

SECTION

User note:
These details shall be used in conjunction with all the City standard details and specifications. Refer to the City standard specifications for the materials, installation, testing, protective coatings, and other requirements.

Date	By	Rev.

IRRIGATION MAIN THRUST BLOCK

CITY OF LIVERMORE
STANDARD DETAIL

Dwn: FY		Date: May–13	NO.
Ckd: Spec. Committee		Scale: NONE	L–13

City Engineer

L13.DWG

NOTES:

1. All irrigation piping shall be installed in the trench in a serpentine manner per the manufacturer's recommendations.
2. All main supply lines to be installed per the manufacturer's recommendations.
3. Trench backfill shall be native material compacted to 90% R.C. minimum.
4. All electrical service components shall be U.L. listed and installed per National Electric Code requirements.
5. All main & lateral lines and control wiring shall be placed in sleeves under paved or hardsurfaced areas (see detail below).

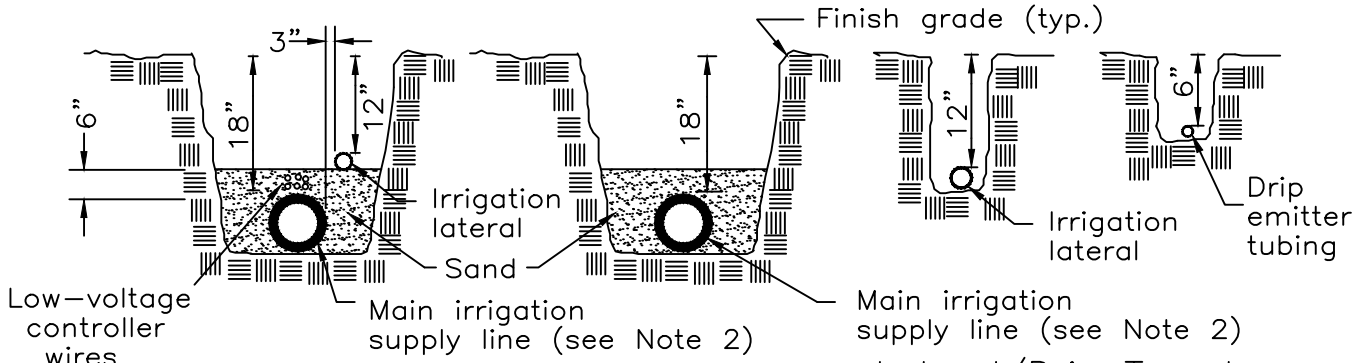

Combined Trench | Main Line Trench | Lateral/Drip Trenches

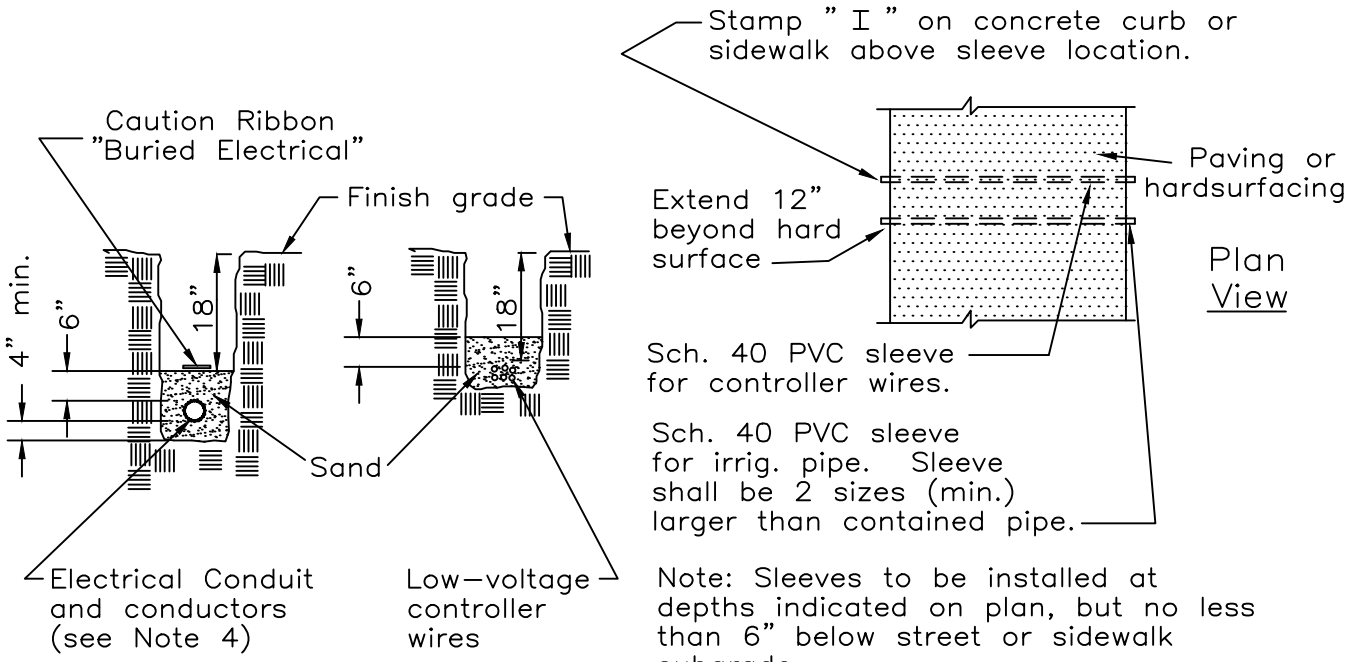

Note: Sleeves to be installed at depths indicated on plan, but no less than 6" below street or sidewalk subgrade.

120-Volt or Flow Sensor Conduit Trench | Controller Wire Trench | Typical Irrigation Crossing at Paving or Hardsurfacing

User note:
These details shall be used in conjunction with all the City standard details and specifications. Refer to the City standard specifications for the materials, installation, testing, protective coatings, and other requirements.

Date	By	Rev.

IRRIGATION TRENCHING

CITY OF LIVERMORE
STANDARD DETAIL

Dwn:	MAS	Date: May-13	NO.
Ckd:	Spec. Committee	Scale: NONE	L-14

City Engineer

L14.DWG

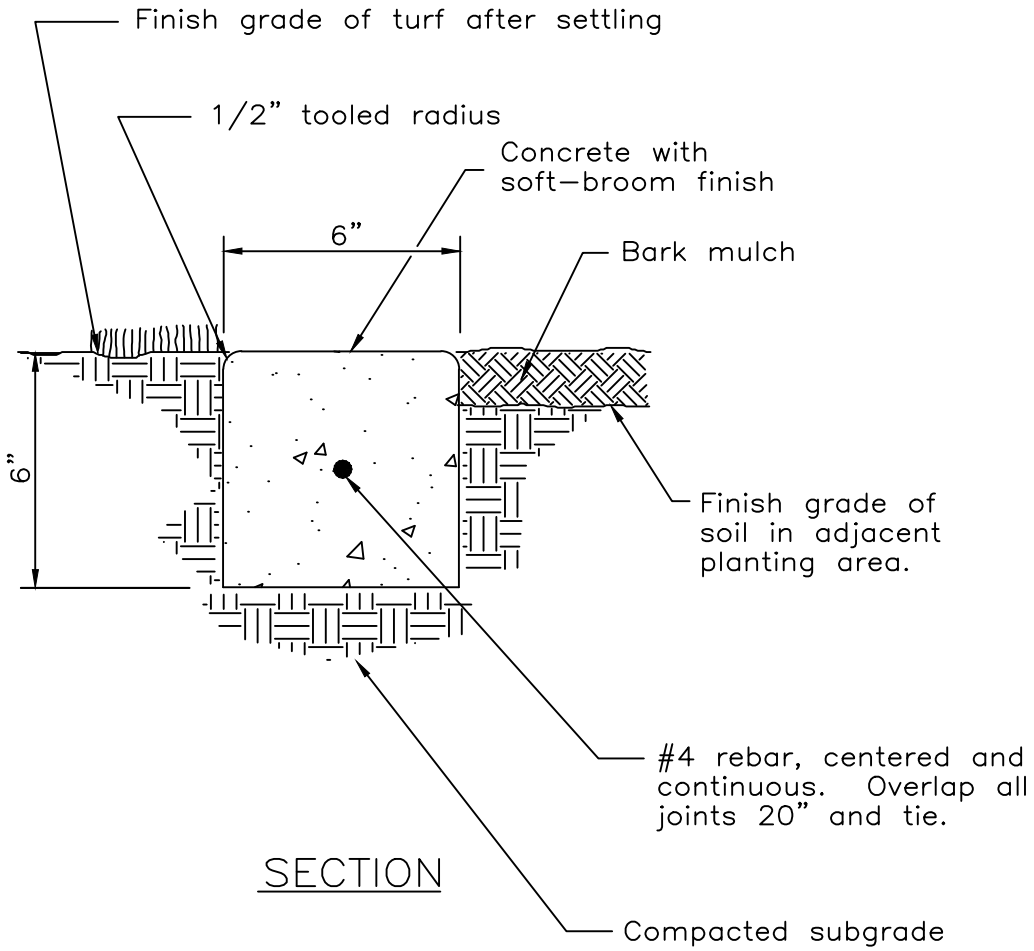

SECTION

NOTE:
Provide 1/4" wide by 1/2" deep score lines at 8'-0" o.c. and expansion joints at 32'-0" o.c.

User note:
These details shall be used in conjunction with all the City standard details and specifications. Refer to the City standard specifications for the materials, installation, testing, protective coatings, and other requirements.

Date	By	Rev.

CONCRETE DIVIDER

CITY OF LIVERMORE
STANDARD DETAIL

Dwn: FY	Date: May-13	NO.
Ckd: Spec. Committee	Scale: NONE	L-15

City Engineer

L15.DWG

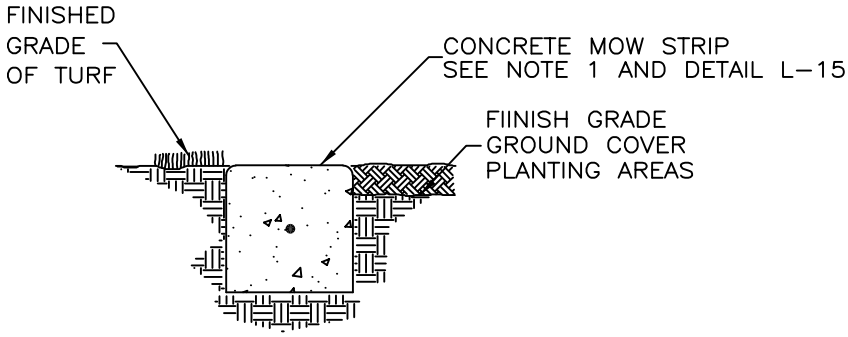

CONCRETE MOW STRIP SECTION

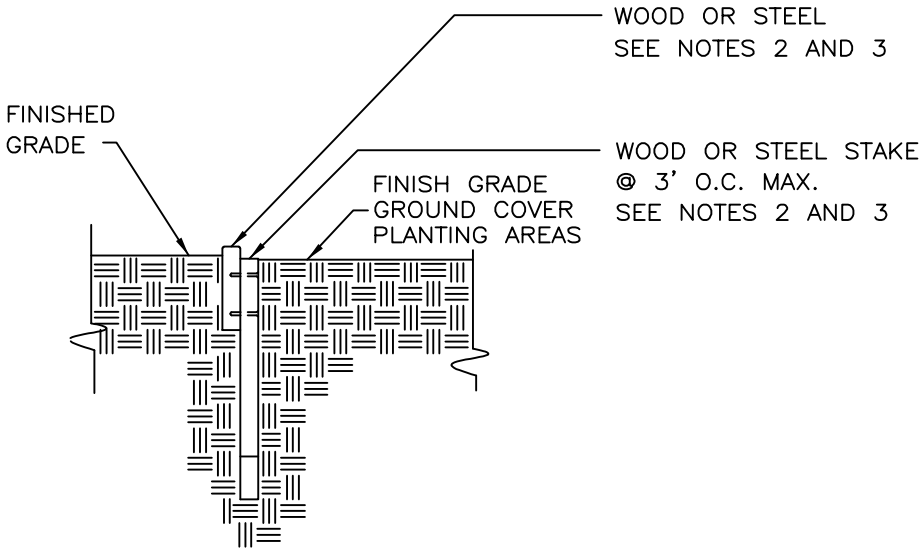

NON–TURF STRIP SECTION

Notes:

1. CONCRETE MOW STRIP IS THE PROFFERED METHOD FOR SEPARATING TURF FROM LANDSCAPE AREAS.
2. STEEL EDGING IS AN OPTION IN CERTAIN NON–TURF APPLICATIONS WITH PLAN REVIEW APPROVAL. USE – MANUFACTURED REQUIRED METAL STAKES FOR METAL EDGING.
3. REDWOOD EDGING IS AN OPTION IN CERTAIN NON–TURF APPLICATIONS WITH PLAN REVIEW APPROVAL. USE – PLATED DECK SCREWS FOR WOOD STAKE ATTACHMENT.
4. ALLOW FOR THERMAL EXPANSION & CONTRACTION BY LEAVING GAPS IN THE SLIP JOINTS OR AT THE END OF THE RUN (FOR WOOD).
5. STAKE APPROX 3' 0" OC (MORE FOR STRAIGHT RUNS LESS FOR CURVES).

User note:
These details shall be used in conjunction with all the City standard details and specifications. Refer to the City standard specifications for the materials, installation, testing, protective coatings, and other requirements.

Date	By	Rev.
5/26/20	JT	1

L16.DWG

LANDSCAPE EDGING

CITY OF LIVERMORE
STANDARD DETAIL

Dwn: FY/JT	Date: Nov–22	NO.
Ckd: Spec. Committee	Scale: NONE	L–16

City Engineer

NOTE: Backing lot landscape treatments, which include wall materials, design, and alignment, as well as landscaping layout and design, are subject to Design Review approval.

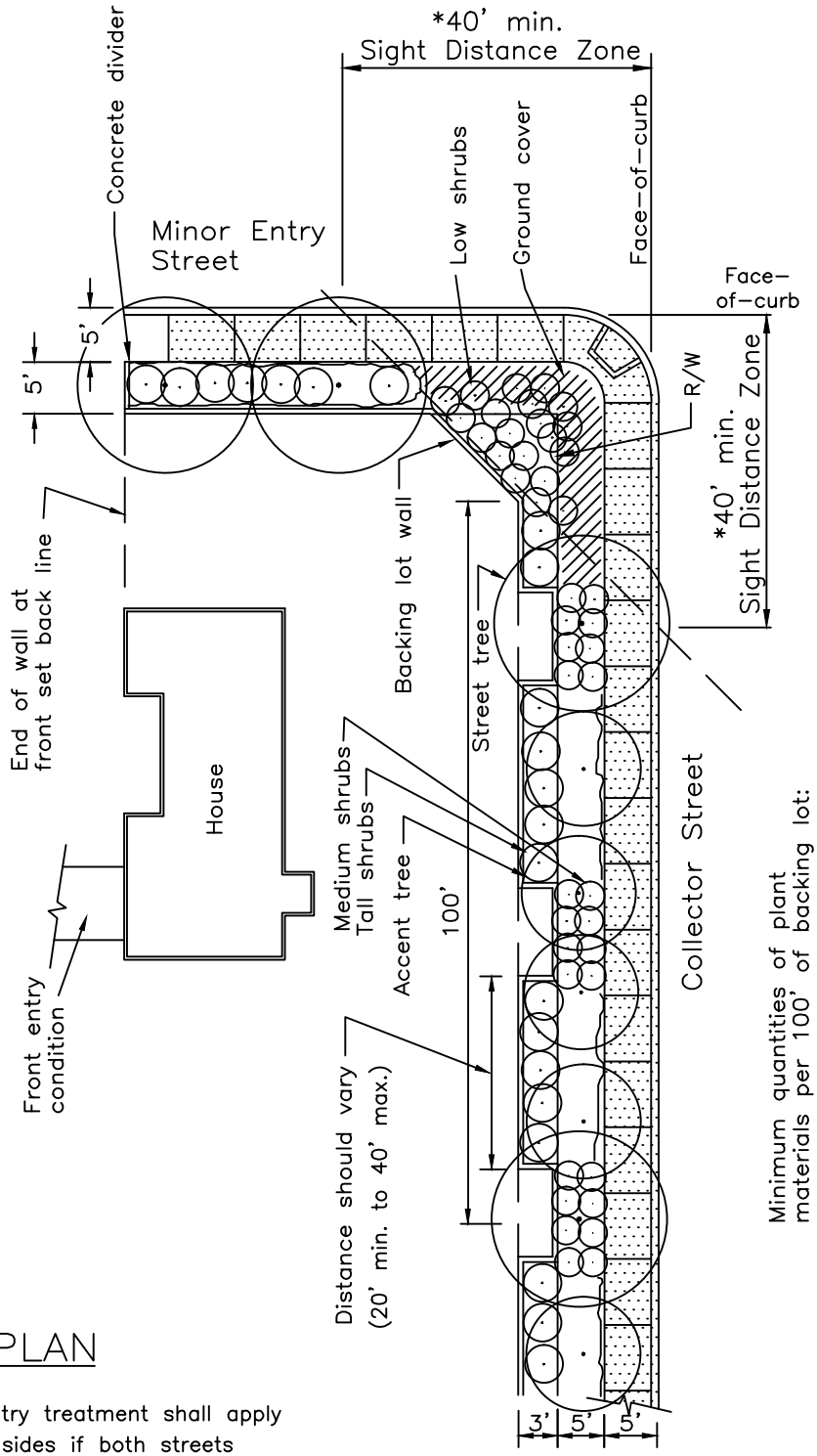

* SIGHT DISTANCE REQUIREMENT APPLIES TO ALL INTERSECTIONS

PLAN

Minor entry treatment shall apply to both sides if both streets are minor

SIGHT DISTANCE ZONE

No trees or accent trees allowed unless trimmed to provide 6'-minimum clearance from root crown to lowest scaffold branch. Low shrubs and accent ground cover shall be trimmed to a maximum height of 30" above the curb.

NOTE: This is a general guideline only. Wall pattern\materials, alignment & planting design to be approved by Design Review Committee (DRC). These are minimums. The DRC can approve more than these minimums but not less.

Minimum quantities of plant materials per 100' of backing lot:

TREES (7 trees min. per 100'):
- 24"-box: 2-3 trees
- 15-gallon: 4-5 trees

SHRUBS: (Mature Height)
- Large 5'-10' high: 23 shrubs
- Medium 3'-5' high: 24 shrubs
- Small 1'-3' high: 30 shrubs

GROUND COVER:
- Fast Growing: 12" o.c.
- Moderate Growing: 9" o.c.
- Slow Growing: 6" o.c.

User note:
These details shall be used in conjunction with all the City standard details and specifications. Refer to the City standard specifications for the materials, installation, testing, protective coatings, and other requirements.

Date	By	Rev.

ILLUSTRATIVE BACKING LOT TREATMENT

COLLECTOR/MINOR STREETS

CITY OF LIVERMORE
STANDARD DETAIL

Dwn: FY	Date: May-13	NO.
Ckd: Spec. Committee	Scale: NONE	L-17A

City Engineer

L17A.DWG

NOTE: Backing lot landscape treatments, which includes wall materials, design, and alignment, as well as landscaping layout and design, are subject to Design Review approval.

SIGHT DISTANCE ZONE

- No trees or accent trees allowed unless trimmed to provide 6'–minimum clearance from root crown to lowest scaffold branch.
- Low shrubs and accent ground cover shall be trimmed to a maximum height of 30" above the curb.

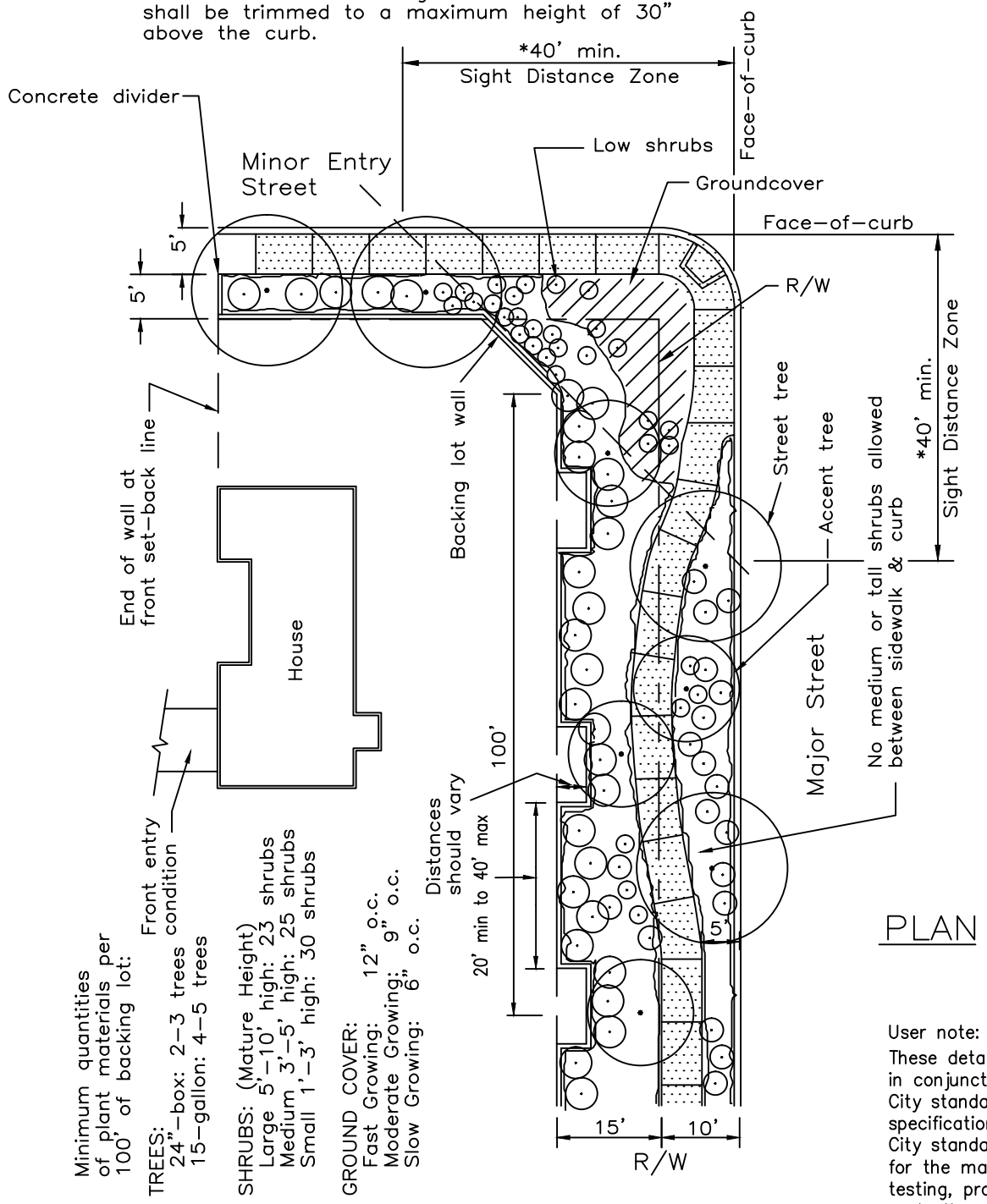

NOTE: This is a general guideline only. Wall pattern\materials, alignment & planting design to be approved by Design Review Committee (DRC). These are minimums. The DRC can approve more than these minimums but not less than.

* SIGHT DISTANCE REQUIREMENT APPLIES TO ALL INTERSECTIONS

PLAN

User note:
These details shall be used in conjunction with all the City standard details and specifications. Refer to the City standard specifications for the materials, installation, testing, protective coatings, and other requirements.

*Sight distance requirement applies to all intersections.

Date	By	Rev.

ILLUSTRATIVE BACKING LOT TREATMENT

MAJOR/MINOR STREETS

CITY OF LIVERMORE
STANDARD DETAIL

Dwn: FY	Date: May–13	NO.
Ckd: Spec. Committee	Scale: NONE	L–17B

City Engineer

L17B.DWG

NOTE: Backing lot landscape treatments, which include wall materials, design, and alignment, as well as landscaping layout and design, are subject to Design Review approval.

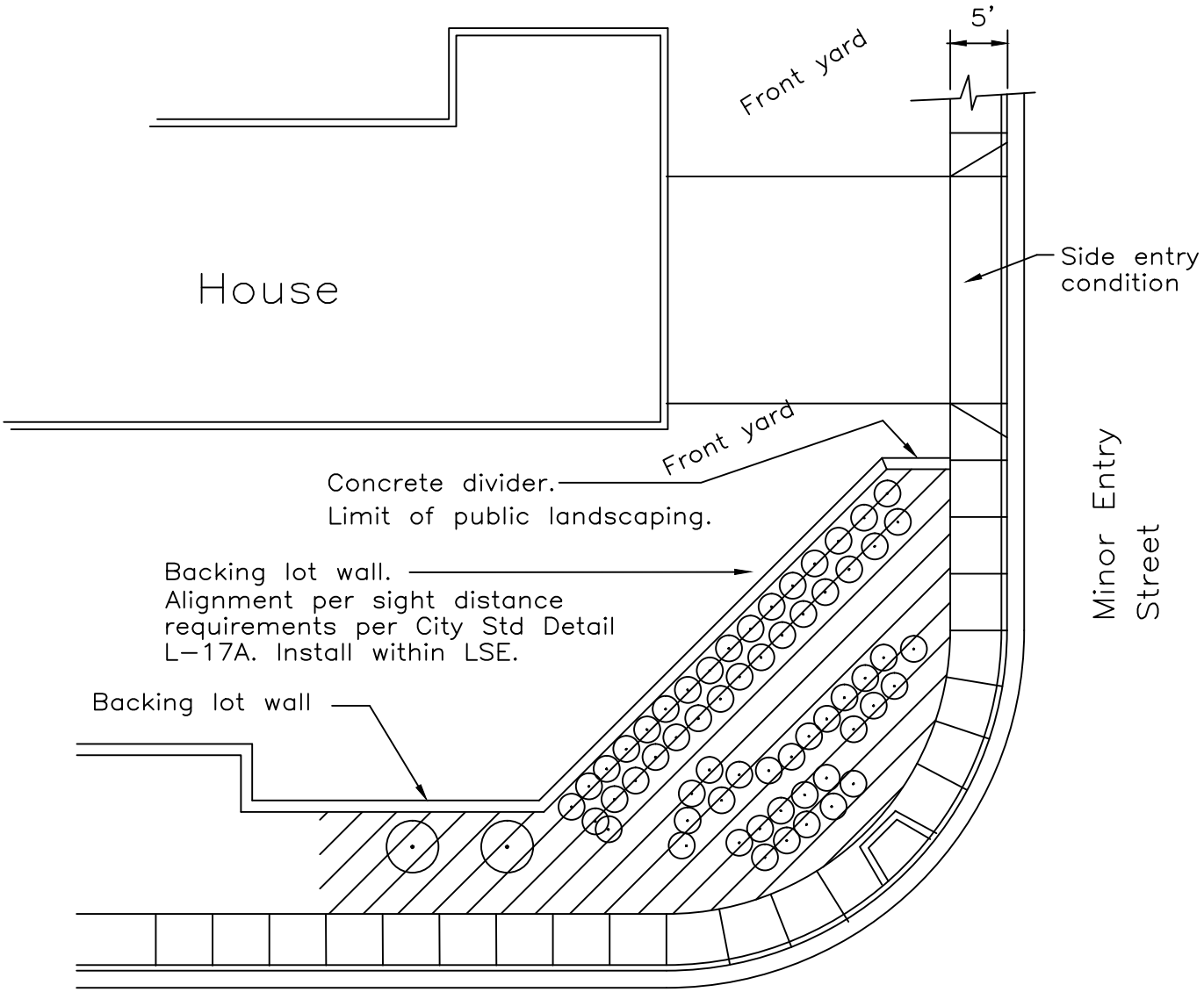

Collector or Major Street

PLAN

User note:
These details shall be used in conjunction with all the City standard details and specifications. Refer to the City standard specifications for the materials, installation, testing, protective coatings, and other requirements.

Date	By	Rev.

ILLUSTRATIVE BACKING LOT TREATMENT

(CORNER TREATMENT)

CITY OF LIVERMORE
STANDARD DETAIL

Dwn:	MAS/KY	Date: May-13	NO.
Ckd:	Spec. Committee	Scale: NONE	L-17C

City Engineer

L17C.DWG

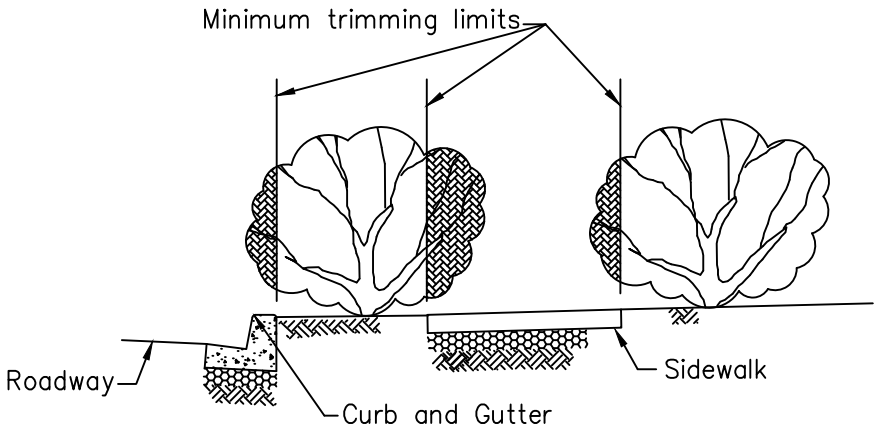

Trim plants so as not to encroach into the curb and sidewalk. It is recommended that you trim branches away from the edge of the curb or sidewalk to minimize the frequencey of trimming.

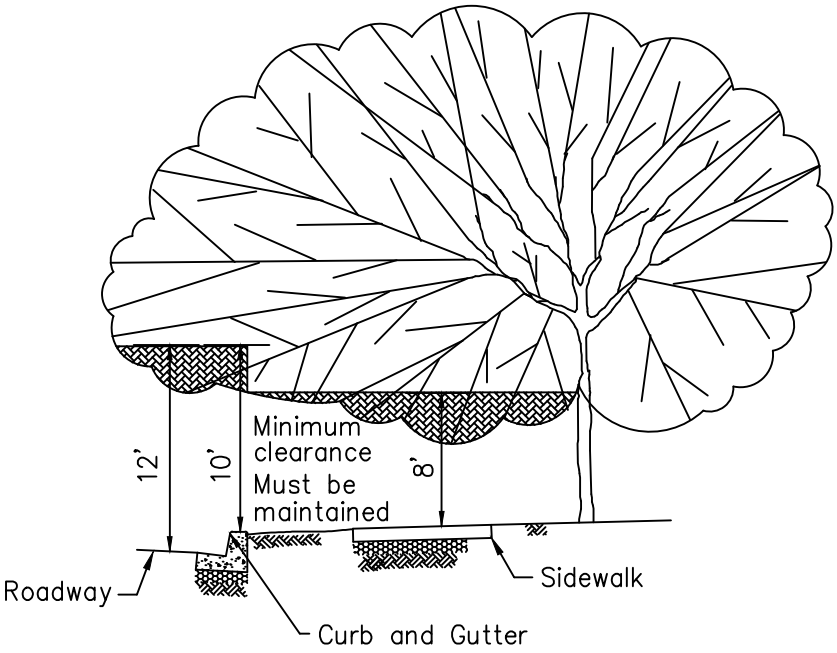

Note:

Trees planted adjacent to the roadway and sidewalk must be trimmed to allow safe passage of vehicles and pedestrians. Trees should be pruned whenever a street sign or traffic signal is not visible from a minimum distance of 150 feet.

User note:
These details shall be used in conjunction with all the City standard details and specifications. Refer to the City standard specifications for the materials, installation, testing, protective coatings, and other requirements.

Date	By	Rev.

TREE AND SHRUB PRUNING GUIDELINES

CITY OF LIVERMORE
STANDARD DETAIL

Dwn: JV	Date: May–13	NO.
Ckd: Spec. Committee	Scale: NONE	L–17D

City Engineer

L–17D.DWG

	Important Character							Cultural Preference					Tolerances											Growth Info			Planting Info			
Plant Name and Description	**Deciduous**	**Evergreen**	**Flowers, Color**	**Flowering Period**	**Fruit**	**Fruiting Period**	**Fall Color**	**Sun**	**Part Shade**	**Good Drainage**	**Irrigation**	**No water after 2nd year**	**Alkaline Soils**	**Boron Tolerant**	**Sprinklers**	**Wind**	**Heat**	**Poorly Drained Soils**	**Well Drained/Clay-Loam**	**Well Drained/Sandy**	**Turf Areas**	**Small Planters**	**Re-claimed Water**	**Growth Rate**	**Height in 10 Yrs/ Maturity**	**Spread in 10 Yrs/Maturity**	**Minimum Planter Size**	**Sidewalk Damage Potential**	**Pruning Frequency**	**Comments**
Acacia melanoxylon **Black Acacia**		X	Y	SP	X	W		X	X	X	X	X	X	X	X	X	X	X		X			X	M	20 30	15 20	7	VH	3	
Acer buergeranum **Trident Maple**	X						R O	X	X	X	X				X	X	X		X	X		X		SL	20 30	20 30	3	L	2 10	
Acer campestre **"Queen Elizabeth"**	X						Y	X	X	X	X			X	X	X	X		X	X	X			M	15 30	10 20	4	L	5	
Acer griseum **Paperbark Maple**	X						R	X	X	X	X				X	X	X		X	X				M F	20 25	10 20	3	L	2 10	
Acer Macrophyllum **Big Leaf Maple**	X		Y	SP	X		Y	X	X		X								X	X				M	30 75	30 50	7	M		
Acer Negundo Californicum **Box Elder**	X			SP	X	S	Y	X	X	X			X						X	X				M F	60	50		M		
Acer negundo "sensation" **Sensation Box Elder**	X		P	SP			O	X	X	X	X			X	X	X	X		X	X	X			M F	15 25	10 20	5	M	5	
Acer platanoides **Norway Maple**	X						R	X	X	X	X				X		X		X	X			X	M	25 40	15 30	5	M	5	AC
Aesculus hippocastanum **Horsechestnut**	X		W	SP				X			X				X							X		S	15 25	10 20	5	M	2 5	
Alnus Rhombifolia **White Alder**	X		Y	SP	X	FA WI S		X	X		X					X	X		X	X				F	50 90	30 50	7	M		

LEGEND

AC = Avoid Clay Soils	F = Fast	H = High	MT= Multi Trunk	R = Red	SP = Spring	W = White
BL = Blue	FA = Fall	L = Low	O = Orange	S = Summer	U = Unknown	WI= Winter
BR = Brown	FB = Fireblight	M = Moderate	P = Purple	SH= Short Lived	V = Various	Y = Yellow
E = Experimental	FR = Frost Sensitive	MR=Mildew Resistant	Pi = Pink	SL =Slow	VH= Very High	

No. L-18A

TREE PLANTING GUIDE

CITY OF LIVERMORE
STANDARD DETAIL

Dwn: : **KY**
Ckd: **Spec Committee**

Date: **March-2020**
Scale: **None**

City Engineer

	Important Character							Cultural Preference					Tolerances											Growth Info			Planting Info			
Plant Name and Description	**Deciduous**	**Evergreen**	**Flowers, Color**	**Flowering Period**	**Fruit**	**Fruiting Period**	**Fall Color**	**Sun**	**Part Shade**	**Good Drainage**	**Irrigation**	**No water after 2nd year**	**Alkaline Soils**	**Boron Tolerant**	**Sprinklers**	**Wind**	**Heat**	**Poorly Drained Soils**	**Well Drained/Clay-Loam**	**Well Drained/Sandy**	**Turf Areas**	**Small Planters**	**Re-claimed Water**	**Growth Rate**	**Height in 10 Yrs/ Maturity**	**Spread in 10 Yrs/Maturity**	**Minimum Planter Size**	**Sidewalk Damage Potential**	**Pruning Frequency**	**Comments**
Alnus Rubra **Red Alder**	X		Y	SP			BR	X	X										X	X				M F	80	30		H		
Arbutus "marina" **Strawberry Tree**		X	W	FA	X	W		X	X	X	X		X	X	X	X	X		X	X	X	X	X	S	20 30	20 30	3	L	2 5	AC
Arbutus Menziesii **Madrone**		X	PI W	SP	X	FA WI S		X	X			X							X	X				M	50 65	30 50	7	M		
Brachychiton populneus **Bottle Tree**		X	W	SP				X		X	X	X				X	X		X	X				M	30 50	20 30	7	H	5 10	
Callistemon viminalis **Weeping Bottle Brush**		X	R	SP				X			X		X		X	X	X			X		X	X	F	20 30	10 15	3	L	3 5	FR
Carpinus betulus **European Hornbeam**	X							X	X		X			X	X	X	X		X			X		M F	25 35	6 8	3	L	5 10	
Casuarina cunninghamiana **Horsetail Tree**		X						X				X	X	X		X	X	X	X	X			X	M	30 70	20 40	10	H	10	
Ceanothus thyrsiflorus **Blue Blossom**		X	B L	SP				X		X		X				X	X			X		X	X	F	10 20	10 20	3	L	3 5	AC SH
Cedrus deodara **Deodar Cedar**		X						X				X		X		X	X		X	X			X	F	30 70	20 40	7	H	10	
Celtis australis **European Hackberry**	X							X	X	X	X	X		X	X	X	X		X	X				F	15 40	10 35	7	VH	6	

LEGEND

AC = Avoid Clay Soils	F = Fast	H = High	MT= Multi Trunk	R = Red	SP = Spring	W = White
BL = Blue	FA = Fall	L = Low	O = Orange	S = Summer	U = Unknown	WI= Winter
BR = Brown	FB = Fireblight	M = Moderate	P = Purple	SH= Short Lived	V = Various	Y = Yellow
E = Experimental	FR = Frost Sensitive	MR=Mildew Resistant	Pi = Pink	SL =Slow	VH= Very High	

No. L-18B

TREE PLANTING GUIDE

CITY OF LIVERMORE
STANDARD DETAIL

Dwn: : **KY**
Ckd: **Spec Committee**

Date: **March-2020**
Scale: **None**

City Engineer

	Important Character							Cultural Preference					Tolerances											Growth Info			Planting Info			
Plant Name and Description	**Deciduous**	**Evergreen**	**Flowers, Color**	**Flowering Period**	**Fruit**	**Fruiting Period**	**Fall Color**	**Sun**	**Part Shade**	**Good Drainage**	**Irrigation**	**No water after 2nd year**	**Alkaline Soils**	**Boron Tolerant**	**Sprinklers**	**Wind**	**Heat**	**Poorly Drained Soils**	**Well Drained/Clay-Loam**	**Well Drained/Sandy**	**Turf Areas**	**Small Planters**	**Re-claimed Water**	**Growth Rate**	**Height in 10 Yrs/ Maturity**	**Spread in 10 Yrs/Maturity**	**Minimum Planter Size**	**Sidewalk Damage Potential**	**Pruning Frequency**	**Comments**
Celtis sinensis **Chinese Hackberry**	X						Y	X	X	X	X	X		X	X	X	X		X	X	X			F	15 40	10 35	7	VH	6	AC
Cercidium floridum **Blue Palo Verde**	X		Y	SP				X		X	X				X	X	X			X			X	F	15 30	10 30	5	M	5 10	
Cercis canadensis **Canadian Redbud**	X		R		X		R	X	X	X	X				X	X	X			X		X	X	F	25 35	15 25	3	L	2	
Cercis reniformis **Oklahoma Redbud**	X		V	SP			R	X				X				X	X		X			X	X	M F	20 25	20 25	3	L	2	E
Chionanthus retusus **Chinese Fringe Tree**	X		W	SP S			Y	X	X	X	X				X	X	X			X				SL M	12 30	10 25	5	M	2 8	FR
Chitalpa tashkentonsis **Pink Dawn Chitalpa**	X		Pi	S				X			X				X	X	X					X		F	15 25	15 25	4	L	1 6	
Chorisia speciosa **Floss silk tree**	X	X	P	F A				X			X				X	X	X							SL	25 40	20 30	5	M	5	E FR
Cinnamomum camphora **Camphor Tree**		X	Y	SP	X			X		X			X	X			X		X	X			X	SL	25 50	25 50	10	VH	5 10	AC
Cornus Sericea/ Stolonifera **Western Dogwood**	X		W	S F	X	FA WI	R		X		X								X	X				M	10 12	12		L		
Corylus colurna **Turkish Hazelnut**	X				X		Y	X	X	X	X	X			X	X	X			X				M F	30 50	15 30	4	L	10	

LEGEND

AC = Avoid Clay Soils	F = Fast	H = High	MT= Multi Trunk	R = Red	SP = Spring	W = White
BL = Blue	FA = Fall	L = Low	O = Orange	S = Summer	U = Unknown	WI= Winter
BR = Brown	FB = Fireblight	M = Moderate	P = Purple	SH= Short Lived	V = Various	Y = Yellow
E = Experimental	FR = Frost Sensitive	MR=Mildew Resistant	Pi = Pink	SL =Slow	VH= Very High	

No. L-18C

TREE PLANTING GUIDE

CITY OF LIVERMORE
STANDARD DETAIL

Dwn: : **KY**
Ckd: **Spec Committee**

Date: **March-2020**
Scale: **None**

City Engineer

	Important Character							Cultural Preference					Tolerances											Growth Info			Planting Info			
Plant Name and Description	**Deciduous**	**Evergreen**	**Flowers, Color**	**Flowering Period**	**Fruit**	**Fruiting Period**	**Fall Color**	**Sun**	**Part Shade**	**Good Drainage**	**Irrigation**	**No water after 2nd year**	**Alkaline Soils**	**Boron Tolerant**	**Sprinklers**	**Wind**	**Heat**	**Poorly Drained Soils**	**Well Drained/Clay-Loam**	**Well Drained/Sandy**	**Turf Areas**	**Small Planters**	**Re-claimed Water**	**Growth Rate**	**Height in 10 Yrs/ Maturity**	**Spread in 10 Yrs/Maturity**	**Minimum Planter Size**	**Sidewalk Damage Potential**	**Pruning Frequency**	**Comments**
Cotinus obovatus **Smoke Tree**	X		P	SP			Y R	X		X						X	X			X		X		SL	15 25	10 20	3	L	3+ 5	E
Crataegus phaenopyrum **Washington Hawthorn**	X		W	SP			R	X			X				X	X	X					X		M	15 20	10 20	3	L	2	
Cupressus sempervirens **Italian Cypress**		X						X			X	X	X	X	X	X	X						X		30 60	15 20	7	H	5 10	AC
Eriobotrya deflexa **Loquat**		X	W	SP				X	X	X	X			X	X	X				X		X		F	15 30	10 20	3	L	3	
Eucalyptus gunnii **Cider Gum**		X						X					X			X	X	X	X	X			X	F	20 40	10 20	7	H	5	
Eucalyptus levcoxylon **White Iron Bark**		X	W	S				X		X	X		X	X	X	X	X	X			X			F	20 60	10 30	5	M	5	FR
Eucalyptus microtheca **Flooded Box**		X						X					X			X	X		X	X			X	F	20 35	15 25	7	M	5	MT
Eucalyptus nicholii **Peppermint Eucalyptus**		X						X		X			X	X		X	X		X	X				F	20 35	15 25	5	M	5	
Eucalyptus polyanthemos **Silver Dollar Gum**		X	W	S				X			X		X	X	X	X	X	X					X	F	20 40	15 30	7	M	5	

LEGEND

AC = Avoid Clay Soils	F = Fast	H = High	MT= Multi Trunk	R = Red	SP = Spring	W = White
BL = Blue	FA = Fall	L = Low	O = Orange	S = Summer	U = Unknown	WI= Winter
BR = Brown	FB = Fireblight	M = Moderate	P = Purple	SH= Short Lived	V = Various	Y = Yellow
E = Experimental	FR = Frost Sensitive	MR=Mildew Resistant	Pi = Pink	SL =Slow	VH= Very High	

No. L-18D

TREE PLANTING GUIDE

CITY OF LIVERMORE
STANDARD DETAIL

Dwn: : **KY**
Ckd: **Spec Committee**

Date: **March-2020**
Scale: **None**

City Engineer

	Important Character							Cultural Preference					Tolerances											Growth Info			Planting Info			
Plant Name and Description	**Deciduous**	**Evergreen**	**Flowers, Color**	**Flowering Period**	**Fruit**	**Fruiting Period**	**Fall Color**	**Sun**	**Part Shade**	**Good Drainage**	**Irrigation**	**No water after 2nd year**	**Alkaline Soils**	**Boron Tolerant**	**Sprinklers**	**Wind**	**Heat**	**Poorly Drained Soils**	**Well Drained/Clay-Loam**	**Well Drained/Sandy**	**Turf Areas**	**Small Planters**	**Re-claimed Water**	**Growth Rate**	**Height in 10 Yrs/ Maturity**	**Spread in 10 Yrs/Maturity**	**Minimum Planter Size**	**Sidewalk Damage Potential**	**Pruning Frequency**	**Comments**
Fagus sylvatica **European Beech Tree**	X						R	X	X	X	X				X	X	X		X	X	X			M	20 60	10 30	7	M	5 10	
Fraxinus americana **Autumn Purple**	X						P	X		X	X		X	X	X		X		X	X	X		X	F	30 60	20 40	7	M	5	
Garrya Elliptica **Coast Silk Tassle**		X	Y	W	X	FA WS		X	X										X	X				M	10 20	20	5	L		
Geijera parviflora **Australian Willow**		X						X		X					X		X		X	X				SL	20 30	15 25	4	L	5	
Ginkgo biloba **Maidenhair Tree'Fairmount'**	X						Y	X	X	X	X				X	X	X					X		F	20 55	10 25	3	L	5 10	
Ginkgo biloba **Maidenhair Tree 'Sentenal'**	X						Y	X	X	X	X				X	X	X							F	20 55	10 25	3	L	5 10	
Gleditsia triacanthos **Honey Locust**	X						Y	X					X		X	X	X				X			F	25 50	25 50	5	M	3 5	
Heteromeles Arbutifolia **Toyon**		X	W	S	X	FA W		X	X		X								X	X				SL M	10 25	20	5	L		MT
Hymenosporum flavum **Sweetshade**		X	Y	S				X	X	X							X		X	X				SL	20 30	10 20	3	L	3 5	AC E

LEGEND

AC = Avoid Clay Soils	F = Fast	H = High	MT= Multi Trunk	R = Red	SP = Spring	W = White
BL = Blue	FA = Fall	L = Low	O = Orange	S = Summer	U = Unknown	WI= Winter
BR = Brown	FB = Fireblight	M = Moderate	P = Purple	SH= Short Lived	V = Various	Y = Yellow
E = Experimental	FR = Frost Sensitive	MR=Mildew Resistant	Pi = Pink	SL =Slow	VH= Very High	

No. L-18E

TREE PLANTING GUIDE

CITY OF LIVERMORE
STANDARD DETAIL

Dwn: : **KY**
Ckd: **Spec Committee**

Date: **March-2020**
Scale: **None**

City Engineer

	Important Character							Cultural Preference					Tolerances											Growth Info			Planting Info			
Plant Name and Description	**Deciduous**	**Evergreen**	**Flowers, Color**	**Flowering Period**	**Fruit**	**Fruiting Period**	**Fall Color**	**Sun**	**Part Shade**	**Good Drainage**	**Irrigation**	**No water after 2nd year**	**Alkaline Soils**	**Boron Tolerant**	**Sprinklers**	**Wind**	**Heat**	**Poorly Drained Soils**	**Well Drained/Clay-Loam**	**Well Drained/Sandy**	**Turf Areas**	**Small Planters**	**Re-claimed Water**	**Growth Rate**	**Height in 10 Yrs/ Maturity**	**Spread in 10 Yrs/Maturity**	**Minimum Planter Size**	**Sidewalk Damage Potential**	**Pruning Frequency**	**Comments**
Koelreuteria paniculata **Goldenrain Tree**	X		Y	S	X	WI	Y	X	X	X	X		X		X	X	X	X					X	M	15 30	15 30	3	L	3 5	
Lagerstroemia indica **Crape Myrtle Hybrids**	X		V				V	X		X				X	X	X	X		X	X		X		SL	15 30	10 20	3	L	3 5	MR
Laurus **"X" Saratoga Laurel**		X						X	X	X	X		X		X	X	X	X	X			X	X	F	15 25	10 20	3	L	5	AC
Liquidambar cultivars **Sweet Gum**	X						V	X		X				X		X	X	X						M	20 50	10 25	10	VH	5 10	
Malus cultivars **Crabapples**	X		V		X	FA	V	X			X				X	X	X					X		M	10 20	10 20	2	VL	2 6	
Maytenus boaria **Mayten Tree**		X						X	X	X	X				X		X		X	X			X	M	15 25	10 15	5	M	6	AC
Melaleuca linariifolia **Flaxleaf Paperback**		X	W	S				X			X				X	X	X					X		S	10 20	10 20	3	L	2 5	E FR
Melaleuca quinquenervia **Cajeput Tree**		X	W	SP				X	X	X	X		X		X	X	X			X	X			M F	20 40	12 20	5	M	3	FR

LEGEND

AC = Avoid Clay Soils	F = Fast	H = High	MT= Multi Trunk	R = Red	SP = Spring	W = White
BL = Blue	FA = Fall	L = Low	O = Orange	S = Summer	U = Unknown	WI= Winter
BR = Brown	FB = Fireblight	M = Moderate	P = Purple	SH= Short Lived	V = Various	Y = Yellow
E = Experimental	FR = Frost Sensitive	MR=Mildew Resistant	Pi = Pink	SL =Slow	VH= Very High	

No. L-18F

TREE PLANTING GUIDE

CITY OF LIVERMORE
STANDARD DETAIL

Dwn: : **KY**
Ckd: **Spec Committee**

Date: **March-2020**
Scale: **None**

City Engineer

	Important Character							Cultural Preference					Tolerances											Growth Info			Planting Info			
Plant Name and Description	**Deciduous**	**Evergreen**	**Flowers, Color**	**Flowering Period**	**Fruit**	**Fruiting Period**	**Fall Color**	**Sun**	**Part Shade**	**Good Drainage**	**Irrigation**	**No water after 2nd year**	**Alkaline Soils**	**Boron Tolerant**	**Sprinklers**	**Wind**	**Heat**	**Poorly Drained Soils**	**Well Drained/Clay-Loam**	**Well Drained/Sandy**	**Turf Areas**	**Small Planters**	**Re-claimed Water**	**Growth Rate**	**Height in 10 Yrs/ Maturity**	**Spread in 10 Yrs/Maturity**	**Minimum Planter Size**	**Sidewalk Damage Potential**	**Pruning Frequency**	**Comments**
Melaleuca styphellioides **Prickly Melaleuca**		X	W	SP				X		X	X		X			X	X			X	X			F	20 45	15 20	4	L	4	FR
Michelia doltsopa **(No common name)**		X	W	S				X	X	X	X					X		X		X				M	20 40	10 25	4	L	10	
Morus alba **Fruitless Mulberry**	X						Y	X			X		X	X	X	X	X						X	F	25 40	25 40	10	VH	2	
Nyssa sylvatica **Tupelo**	X						R	X	X		X				X	X	X	X	X		X			M	20 35	10 20	4	L	8	
Olea europea **Majestic Beauty**		X			X			X			X	X	X	X	X	X	X						X	M	20 25	20 25	3	L	2 5	
Olea europea **"Swan Hill"**		X						X		X	X		X	X	X	X	X	X	X				X	M	20 30	20 30	4	L	2 5	
Parkinsonia aculeata **Palo Verde**	X		Y	SP				X		X		X	X		X	X	X					X		F	15 20	15 20	3	L	1 6	E FR
Pinus brutia **Brutia Pine**		X						X				X	X			X	X	X	X	X			X	F	30 80	25 60	10	H	10	
Pinus canariensis **Canary Island Pine**		X						X		X		X	X			X	X			X			X	F	30 80	20 50	5	M	10	

LEGEND

AC = Avoid Clay Soils	F = Fast	H = High	MT= Multi Trunk	R = Red	SP = Spring	W = White
BL = Blue	FA = Fall	L = Low	O = Orange	S = Summer	U = Unknown	WI= Winter
BR = Brown	FB = Fireblight	M = Moderate	P = Purple	SH= Short Lived	V = Various	Y = Yellow
E = Experimental	FR = Frost Sensitive	MR=Mildew Resistant	Pi = Pink	SL =Slow	VH= Very High	

No. L-18G

TREE PLANTING GUIDE

CITY OF LIVERMORE
STANDARD DETAIL

Dwn: : **KY**
Ckd: **Spec Committee**

Date: **March-2020**
Scale: **None**

City Engineer

	Important Character							Cultural Preference					Tolerances											Growth Info			Planting Info			
Plant Name and Description	**Deciduous**	**Evergreen**	**Flowers, Color**	**Flowering Period**	**Fruit**	**Fruiting Period**	**Fall Color**	**Sun**	**Part Shade**	**Good Drainage**	**Irrigation**	**No water after 2nd year**	**Alkaline Soils**	**Boron Tolerant**	**Sprinklers**	**Wind**	**Heat**	**Poorly Drained Soils**	**Well Drained/Clay-Loam**	**Well Drained/Sandy**	**Turf Areas**	**Small Planters**	**Re-claimed Water**	**Growth Rate**	**Height in 10 Yrs/ Maturity**	**Spread in 10 Yrs/Maturity**	**Minimum Planter Size**	**Sidewalk Damage Potential**	**Pruning Frequency**	**Comments**
Pinus eldarica Mondale Pine		X						X				X	X			X	X			X			X	F	30 80	20 50	7	H	10	AC
Pinus pinea Italian Stone Pine		X						X		X		X	X	X		X	X			X			X	M	30 60	25 50	10	H	10	AC
Pinus Sabiniana Grey Pine		X	PI Y	SP	X	FA		X	X			X							X	X				F	40 80	30 50	7	M		
Pinus sylvestris Scots Pine		X						X		X		X	X	X		X	X			X			X	M	30 80	20 50	10	H	10	AC
Pinus thunbergiana Japanese Black Pine		X						X		X		X	X	X		X	X			X			X	M	30 60	20 40	7	H	10	AC
Pistacia chinensis Chinese Pistacio	X						R	X		X	X	X				X	X		X	X	X			M	15 25	10 20	4	L	4	
Pittosporum brevicalyx Saratoga		X	Y	SP				X	X	X	X				X	X	X					X		S M	10 20	6 15	2	L	1 5	E
Platanus cultivars Sycamores	X						Y	X	X	X	X			X	X	X	X			X			X	F	35 60	30 50	5	M	4	AC
Platanus Racemosa California Sycamore	X				X	S FA	BR	X	X		X		X			X	X		X	X				F	30 80	20 50	7	M		
Prunus cerasifera Krauter Vesuvius	X		W	SP	X	S	R	X			X				X	X	X			X		X	X	M	20 30	20 30	4	L	3 5	

LEGEND

AC = Avoid Clay Soils	F = Fast	H = High	MT= Multi Trunk	R = Red	SP = Spring	W = White
BL = Blue	FA = Fall	L = Low	O = Orange	S = Summer	U = Unknown	WI= Winter
BR = Brown	FB = Fireblight	M = Moderate	P = Purple	SH= Short Lived	V = Various	Y = Yellow
E = Experimental	FR = Frost Sensitive	MR=Mildew Resistant	Pi = Pink	SL =Slow	VH= Very High	

No. L-18H

TREE PLANTING GUIDE

CITY OF LIVERMORE
STANDARD DETAIL

Dwn: : **KY**
Ckd: **Spec Committee**

Date: **March-2020**
Scale: **None**

City Engineer

	Important Character							Cultural Preference					Tolerances											Growth Info			Planting Info			
Plant Name and Description	**Deciduous**	**Evergreen**	**Flowers, Color**	**Flowering Period**	**Fruit**	**Fruiting Period**	**Fall Color**	**Sun**	**Part Shade**	**Good Drainage**	**Irrigation**	**No water after 2nd year**	**Alkaline Soils**	**Boron Tolerant**	**Sprinklers**	**Wind**	**Heat**	**Poorly Drained Soils**	**Well Drained/Clay-Loam**	**Well Drained/Sandy**	**Turf Areas**	**Small Planters**	**Re-claimed Water**	**Growth Rate**	**Height in 10 Yrs/ Maturity**	**Spread in 10 Yrs/Maturity**	**Minimum Planter Size**	**Sidewalk Damage Potential**	**Pruning Frequency**	**Comments**
Prunus caroliniana **Carolina Laurel Cherry**		X						X								X	X		X	X		X	X	M	15 25	10 15	4	L	2 5	E
Prunus sargentii **Flowering Cherry**	X		V				V	X		X	X			X	X	X	X		X	X		X		S M	15 20	15 20	3	L	2 5	AC
Pyrus calleryana **Chanticleer Pear**	X		W	SP			Y R	X			X			X	X	X	X		X	X	X			M	25 50	15 35	5	M	3 5	
Pyrus calleryana **"Red Spire" Pear**	X		W	SP			R Y	X			X			X	X	X	X		X	X	X			M	25 50	20 35	5	M	3 5	FB
Pyrus kawakamii **Evergreen Pear**	X	X	W	SP WI				X			X			X	X	X	X		X	X	X			M	25 40	25 40	5	M	3 5	FB
Pyrus ussuriensis **Prairie Gem Pear**	X		W		X	S	R	X			X					X	X					X		F	15 25	15 25	3	L	3 6	E
Quercus agrifolia **Coast Live Oak**		X						X	X	X		X		X		X	X		X	X			X	M	15 40	10 50	5	M	5	
Quercus bicolor **Swamp White Oak**	X						BR	X	X		X				X	X	X		X		X			M F	20 45	10 25	4	L	10	AC
Quercus Berberidifolia **Scrub Oak**		X		SP	X	S FA		X	X	X	X														10 15	10 15	5	M		

LEGEND

AC = Avoid Clay Soils	F = Fast	H = High	MT= Multi Trunk	R = Red	SP = Spring	W = White
BL = Blue	FA = Fall	L = Low	O = Orange	S = Summer	U = Unknown	WI= Winter
BR = Brown	FB = Fireblight	M = Moderate	P = Purple	SH= Short Lived	V = Various	Y = Yellow
E = Experimental	FR = Frost Sensitive	MR=Mildew Resistant	Pi = Pink	SL =Slow	VH= Very High	

No. L-18I

TREE PLANTING GUIDE

CITY OF LIVERMORE
STANDARD DETAIL

Dwn: : **KY**
Ckd: **Spec Committee**

Date: **March-2020**
Scale: **None**

City Engineer

	Important Character							Cultural Preference					Tolerances											Growth Info			Planting Info			
Plant Name and Description	**Deciduous**	**Evergreen**	**Flowers, Color**	**Flowering Period**	**Fruit**	**Fruiting Period**	**Fall Color**	**Sun**	**Part Shade**	**Good Drainage**	**Irrigation**	**No water after 2nd year**	**Alkaline Soils**	**Boron Tolerant**	**Sprinklers**	**Wind**	**Heat**	**Poorly Drained Soils**	**Well Drained/Clay-Loam**	**Well Drained/Sandy**	**Turf Areas**	**Small Planters**	**Re-claimed Water**	**Growth Rate**	**Height in 10 Yrs/ Maturity**	**Spread in 10 Yrs/Maturity**	**Minimum Planter Size**	**Sidewalk Damage Potential**	**Pruning Frequency**	**Comments**
Quercus chrysolepis **Gold Cup Oak**		X						X	X	X	X	X				X	X					X		S M	20 60	8 30	4	M	2 10	E AC
Quercus coccinea **Scarlet Oak**	X						R	X	X	X	X				X	X	X			X				M	20 50	15 40	4	L	8	AC
Quercus Douglasii **Blue Oak**	X				X	FA WI	BR O	X	X		X						X		X	X				SL	30 50	40 70	5	M		
Quercus ilex **Holly Oak**		X			X			X	X	X	X	X	X	X	X	X	X	X				X	X	S M	15 20	15 20	7	H	3 10	
Quercus Kelloggii **California Black Oak**	X				X	FA WI	O	X	X		X								X	X					30 80	30 80	7	M		
Quercus lobata **Valley Oak**	X							X	X	X	X	X	X		X	X	X		X	X			X	M	20 60	10 70	6	M	6	AC
Quercus rubra **Red Oak**	X						R	X	X	X	X					X	X		X	X	X			F	30 70	20 50	6	M	5	
Quercus robur **English Oak**	X							X	X	X	X	X	X			X	X		X	X			X	F	30 60	30 60	6	M	6	
Quercus shumardii **Shumard Oak**	X						R	X	X	X	X				X	X	X		X	X	X			M F	20 50	15 40	6	M	8	

LEGEND

AC = Avoid Clay Soils	F = Fast	H = High	MT= Multi Trunk	R = Red	SP = Spring	W = White
BL = Blue	FA = Fall	L = Low	O = Orange	S = Summer	U = Unknown	WI= Winter
BR = Brown	FB = Fireblight	M = Moderate	P = Purple	SH= Short Lived	V = Various	Y = Yellow
E = Experimental	FR = Frost Sensitive	MR=Mildew Resistant	Pi = Pink	SL =Slow	VH= Very High	

No. L-18J

TREE PLANTING GUIDE

CITY OF LIVERMORE
STANDARD DETAIL

Dwn: : **KY**
Ckd: **Spec Committee**

Date: **March-2020**
Scale: **None**

City Engineer

	Important Character							Cultural Preference					Tolerances											Growth Info			Planting Info			
Plant Name and Description	**Deciduous**	**Evergreen**	**Flowers, Color**	**Flowering Period**	**Fruit**	**Fruiting Period**	**Fall Color**	**Sun**	**Part Shade**	**Good Drainage**	**Irrigation**	**No water after 2nd year**	**Alkaline Soils**	**Boron Tolerant**	**Sprinklers**	**Wind**	**Heat**	**Poorly Drained Soils**	**Well Drained/Clay-Loam**	**Well Drained/Sandy**	**Turf Areas**	**Small Planters**	**Re-claimed Water**	**Growth Rate**	**Height in 10 Yrs/ Maturity**	**Spread in 10 Yrs/Maturity**	**Minimum Planter Size**	**Sidewalk Damage Potential**	**Pruning Frequency**	**Comments**
Quercus suber **Cork Oak**		X						X	X	X		X	X	X		X	X		X	X			X	M	20 50	10 30	6	M	5	AC
Quercus Wislizenii **Interior Live Oak**		X			X	FA WI		X	X		X								X	X				SL	30 75	30 75	7	M		
Rhus lancea **African Sumac**		X			X			X	X		X	X	X		X	X	X	X						M	15 20	15 20	5	M	3 5	
Robinia pseudoacacia **Purple Robe Locust**	X		P	SP			Y	X				X	X	X			X	X					X	F	25 40	20 35	5	M	1 3	
Salix Laevigata **Red Willow**	X						Y												X	X				M F	20 45	30	7	H		
Sambucus Mexicana **Blue Elderberry**	X		Y	SP S	X	S FA		X	X		X								X	X				M F	10 25	15	5	L		SH
Schinus molle **California Pepper Tree**		X			R	S		X		X	X		X			X	X	X					X	F	15 30	15 35	7	H	6	FR
Sequoia sempervirens **"Coast Redwood"**		X						X	X		X				X	X	X		X	X				F	30 60	20 40	7	H	10	
Sophora japonica **Japanese Pagoda**	X		Y	S	X	F	Y	X	X	X			X	X	X	X	X	X	X	X	X		X	M S	20 40	20 40	5	M	3 5	FR

LEGEND

AC = Avoid Clay Soils	F = Fast	H = High	MT= Multi Trunk	R = Red	SP = Spring	W = White
BL = Blue	FA = Fall	L = Low	O = Orange	S = Summer	U = Unknown	WI= Winter
BR = Brown	FB = Fireblight	M = Moderate	P = Purple	SH= Short Lived	V = Various	Y = Yellow
E = Experimental	FR = Frost Sensitive	MR=Mildew Resistant	Pi = Pink	SL =Slow	VH= Very High	

No. L-18K

TREE PLANTING GUIDE

CITY OF LIVERMORE
STANDARD DETAIL

Dwn: : **KY**
Ckd: **Spec Committee**

Date: **March-2020**
Scale: **None**

City Engineer

	Important Character							Cultural Preference					Tolerances											Growth Info			Planting Info			
Plant Name and Description	**Deciduous**	**Evergreen**	**Flowers, Color**	**Flowering Period**	**Fruit**	**Fruiting Period**	**Fall Color**	**Sun**	**Part Shade**	**Good Drainage**	**Irrigation**	**No water after 2nd year**	**Alkaline Soils**	**Boron Tolerant**	**Sprinklers**	**Wind**	**Heat**	**Poorly Drained Soils**	**Well Drained/Clay-Loam**	**Well Drained/Sandy**	**Turf Areas**	**Small Planters**	**Re-claimed Water**	**Growth Rate**	**Height in 10 Yrs/ Maturity**	**Spread in 10 Yrs/Maturity**	**Minimum Planter Size**	**Sidewalk Damage Potential**	**Pruning Frequency**	**Comments**
Taxodium mucronatum **Mexican Cypress**	X	X						X	X		X		X		X	X	X	X			X			F M	15 60	5 20	5	M	5 10	
Tilia americana **Redmond Linden**	X		W	SP			Y	X	X		X				X	X	X					X		M	20 35	10 25	5	M	2 10	E
Tipuana tipu **Tipu Tree**	X	X	Y					X			X				X	X	X					X		F	15 30	12 25	3	L	1 8	E
Tristania lauring **Swamp Myrtle**		X	Y	S				X	X	X	X				X	X	X		X			X		M	12 20	10 15	3	L	6	
Ulmus parvifolia "drake" **Evergreen Elm**		X						X			X				X	X	X	X	X	X			X	F	30 60	35 70	6	H	3	
Ulmus "pioneer" **Pioneer Elm**	X						Y	X	X	X	X	X	X		X	X	X	X	X	X			X	VF	30 50	25 50	7	H	5	
Ulmus "heritage" **Frontier Elm**	X						R	X	X		X		X		X	X	X	X	X				X	VF	20 40	15 30	7	H	5	
Umbellularia Californica **California Bay**		X	Y	SP	X	S		X	X		X								X	X				SL	15 50	15 50	5	M		
Vitex angus-castus **Chaste Tree**	X		BL	FA			Y	X			X			X	X	X	X	X	X	X		X		S M	12 20	8 15	3	L	5	
Zelkova serrata **Sawleaf Zelkova**	X						Y R	X			X			X	X	X	X		X	X			X	M F	25 50	25 50	7	H	3 5	

LEGEND

AC = Avoid Clay Soils	F = Fast	H = High	MT= Multi Trunk	R = Red	SP = Spring	W = White
BL = Blue	FA = Fall	L = Low	O = Orange	S = Summer	U = Unknown	WI= Winter
BR = Brown	FB = Fireblight	M = Moderate	P = Purple	SH= Short Lived	V = Various	Y = Yellow
E = Experimental	FR = Frost Sensitive	MR=Mildew Resistant	Pi = Pink	SL =Slow	VH= Very High	

No. L-18L

TREE PLANTING GUIDE

CITY OF LIVERMORE
STANDARD DETAIL

Dwn: : **KY**
Ckd: **Spec Committee**

Date: **March-2020**
Scale: **None**

City Engineer

L19A.DWG

PLANT CHOICES ARE NOT LIMITED TO THIS PLANTING GUIDE LIST

Botanical Name: Common Name	SHRUB CHARACTERISTICS																			ENVIRONMENTAL TOLERANCE										COMMENTS
	TYPE		HEIGHT			SHAPE		VIGOR			ROOTING				LEAF SIZE			FLOWER		EXPOSURE			SOIL				FROST		DRO-UGHT		
	Evergreen	Deciduous	18" – 3' Small	3' – 5' Medium	5' – 10' Large	Upright	Spreading	Slow	Moderate	Fast	Large Vigorous	Shallow, Surface	Deep	Root Suckers	Fine	Medium	Coarse	Showy	Not Showy	Sun	Partial Shade	Deep Shade	Good Drainage	Poor Drainage	Boron Contaminated	Sodium Contaminated	Yes	No	Yes	No	
Abelia grandiflora "Sherwoodii": Glossy Abelia	●			●			●		●				●		●			●		●	●		●				●			●	More compact than below
Abelia grandiflora: Glossy Abelia	●				●		●		●						●			●		●							●			●	Needs pruning for best appearance
Agapanthus "Peter Pan": Lily of the Nile	●		●			●			●			●					●	●		●	●			●						●	Best with N.E. exposure
Agapanthus "Queen Anne": Lily of the Nile	●		●			●				●		●					●	●		●	●						●			●	Medium height blue
Agapanthus "Rancho White": Lily of the Nile	●		●			●				●		●					●	●		●	●						●		●		Low white variety
Arbutus unedo "Compacta": Strawberry Tree	●			●		●		●					●				●		●	●	●			●			●		●		Medium height
Arbutus unedo: Strawberry Tree	●				●	●			●				●				●		●	●	●			●			●			●	Tall – Can be small tree
Berberis thunbergii: Atropurprea Nana		●		●		●			●				●		●				●	●	●			●			●			●	Bronze foliage with sun
Berberis thunbergii: Japanese Barberry		●		●		●			●				●			●			●	●	●			●			●		●		Good barrier
Cistus Purpureus: Orchid Rockrose	●			●			●		●				●		●			●		●			●	●				●	●		
Cistus 'Sunset': Pink Rockrose	●			●			●		●				●		●			●		●			●					●	●		
Cotoneaster (select cultivars)	●	●	●	●			●		●	●		●			●			●		●	●		●			●	●		●		Wooly Aphids problem
Cotoneaster lacteus: Parney Cotoneaster	●				●		●			●			●			●			●	●				●	●	●	●		●		Good barrier/Screen/Banks
Dodonaea viscosa "Purpurea": Purple Hop Bush	●				●	●				●			●			●			●	●			●			●	●		●		Fast/Becomes treelike
Eriogonum Fasciculatum: California Buckwheat	●			●			●		●				●		●			●		●			●					●	●		Good for Erosion Control
Escallonia "Fradesii"	●			●		●				●			●			●		●		●	●			●	●	●	●			●	Good screen/Tolerates wind
Escallonia "Newport"	●		●				●	●				●			●			●		●	●		●					●		●	Low shrub/Showy flower
Escallonia "Terri"	●			●			●		●				●			●		●		●			●			●	●			●	Medium height/Good foliage color
Euryops Pectinatus: Euryops	●			●			●		●				●		●			●		●			●					●	●		
Garrya elliptica "James Roof": Coast Silktassel	●			●	●		●		●				●				●	●		●	●		●				●		●		Good screen background

L-19A

NO.

SHRUB PLANTING GUIDE

CITY OF LIVERMORE
STANDARD DETAIL

Dwn: KY	Date: May–13
Ckd: Spec. Committee	Scale: NONE

City Engineer

L19B.DWG

PLANT CHOICES ARE NOT LIMITED TO THIS PLANTING GUIDE LIST	SHRUB CHARACTERISTICS																			ENVIRONMENTAL TOLERANCE										COMMENTS
	TYPE		HEIGHT			SHAPE		VIGOR			ROOTING				LEAF SIZE			FLOWER		EXPOSURE			SOIL				FROST		DRO-UGHT		
Botanical Name: Common Name	Evergreen	Deciduous	18" – 3' Small	3' – 5' Medium	5' – 10' Large	Upright	Spreading	Slow	Moderate	Fast	Large Vigarous	Shallow, Surface	Deep	Root Suckers	Fine	Medium	Coarse	Showy	Not Showy	Sun	Partial Shade	Deep Shade	Good Drainage	Poor Drainage	Boron Contaminated	Sodium Contaminated	Yes	No	Yes	No	
Grevillea Rosmarinifolia: Select Cultivars	●			●	●		●		●				●		●			●		●	●		●					●	●		
Ilex cornuta cultivars: Chinese Holly	●				●		●		●				●				●		●	●	●		●				●			●	Showy berries
Ilex vomitoria "Nana": Dwarf Yaupon Holly	●		●				●	●				●			●				●	●	●	●	●			●	●			●	Good low foliage shrub
Lagerstoemia dwarf varieties: Crape Myrtle		●		●	●	●			●				●		●	●		●		●			●				●		●		Color accent/Full sun
Lavandula Stoechas: Spanish Lavender	●		●			●			●				●		●			●		●			●					●	●		
Lavatera Thuringiaca: Bush Mallow	●				●	●			●				●			●		●		●			●				●		●		
Ligustrum "Suwanee River": Privet Dwarf	●		●	●		●		●	●			●				●			●	●	●	●	●	●		●	●			●	Good low/Medium hedge
Ligustrum japonicum "Texanum": Privet	●				●	●			●			●				●	●	●		●	●			●		●	●			●	Good tall screen
Mahonia Nevinii: Nevins Barberry	●				●	●		●					●		●				●	●	●		●	●				●	●		
Melaleuca ericifolia: Health Melaleuca	●				●		●			●		●			●				●	●				●	●	●		●	●		Big tough shrub
Myrica californica: Pacific Wax Myrtle	●				●	●				●			●			●			●	●	●		●				●		●		Good screen/Some drought
Nandina domestica: Heavenly Bamboo	●			●	●	●			●			●			●				●	●	●	●	●				●			●	Best with N.E. exposure
Nerium oleander "Petite Pink": Oleander	●			●			●		●	●		●				●		●		●				●	●	●		●	●		Frost tender when young
Nerium oleander "Petite Salmon": Oleander	●			●		●			●	●		●				●		●		●				●	●	●		●	●		Easily kept 3' – 4'
Nerium oleander cultivars: Oleander	●			●	●	●			●	●		●				●		●		●				●	●	●	●		●		Select compact cultivars
Olea europa "Little Olle": Dwarf Olive	●			●		●		●					●			●			●	●			●	●	●	●	●		●		Good low hedge
Osmanthus fragrans: Sweet Olive	●				●	●			●				●				●		●	●	●			●			●			●	Good screen
Osmanthus heterophyllus: Holly Leaf Osmanthus	●			●	●	●			●				●			●			●	●	●			●			●		●		Useful low hedge
Phormium Tenax: Select Cultivars	●		●	●		●	●			●			●				●		●	●	●		●					●	●		
Pittosporum crassifolium "Nana"	●		●				●		●				●			●			●	●	●			●		●	●		●		Grey green mound

SHRUB PLANTING GUIDE

CITY OF LIVERMORE
STANDARD DETAIL

Dwn: KY	Date: May–13
Ckd: Spec. Committee	Scale: NONE

City Engineer

NO. L-19B

L19C.DWG

PLANT CHOICES ARE NOT LIMITED TO THIS PLANTING GUIDE LIST

Botanical Name: Common Name	SHRUB CHARACTERISTICS																			ENVIRONMENTAL TOLERANCE										COMMENTS
	TYPE		HEIGHT			SHAPE		VIGOR			ROOTING				LEAF SIZE			FLOWER		EXPOSURE			SOIL				FROST		DRO-UGHT		
	Evergreen	Deciduous	18" – 3' Small	3' – 5' Medium	5' – 10' Large	Upright	Spreading	Slow	Moderate	Fast	Large Vigorous	Shallow, Surface	Deep	Root Suckers	Fine	Medium	Coarse	Showy	Not Showy	Sun	Partial Shade	Deep Shade	Good Drainage	Poor Drainage	Boron Contaminated	Sodium Contaminated	Yes	No	Yes	No	
Pittosporum eugenioides	●				●	●				●			●			●			●	●	●		●			●	●		●		Tall screen/ Background
Pittosporum tobira "Veriegata": Tobira	●			●			●		●				●			●			●	●	●						●		●		Medium height
Pittosporum tobira "Wheelers Dwarf"	●		●			●		●	●			●				●			●		●		●				●		●		Mound/Best with N.E. exposure
Pittosporum tobira: Tobira	●			●	●	●			●	●			●			●			●	●	●			●		●	●		●		Sceen background
Raphiolepis "Majestic Beaty"	●				●	●				●			●				●	●		●	●		●				●		●		Accent/Screen/Specimen
Raphiolepis indica "Ballerina"	●			●		●		●		●			●			●		●		●	●		●				●		●		Dark foliage and flowers
Raphiolepis indica "Clara"	●			●	●		●		●	●			●			●		●		●	●		●				●		●		White flowers
Raphiolepis indica "Pinkie"	●			●	●		●		●	●			●			●		●		●	●		●			●	●		●		Similar to "Springtime"
Raphiolepis indica "Springtime"	●			●	●		●		●	●			●				●	●		●	●		●			●	●		●		Heavy flowers/Good mass
Rhamnus alaternus: Italian Buckhorn	●				●	●				●			●			●			●	●			●			●	●		●		Drougt-resistant screen
Rhamnus californica "Eve Case": Coffeeberry	●			●	●		●		●				●			●			●	●	●		●				●		●		Background/Medium height/Neat
Teucrium Chamaedrys/Lucidrys: Germander	●		●			●			●				●			●		●		●			●		●	●	●		●		
Vibirnum tinus cultivars: Laurustinus	●				●				●				●			●		●		●			●				●			●	Mildew/Aphids/Good screen
Westringea Fruticosa: Coast Rosemary (Var.)	●			●	●		●		●				●		●				●	●			●					●	●		Wind Tolerant
Xylosma congestum	●				●		●		●	●			●			●			●	●			●				●		●		Sensitive to soil problems
Xylosma congestum "Compacta"	●			●			●		●				●			●			●	●			●				●		●		Twiggy/More compact

SHRUB PLANTING GUIDE

CITY OF LIVERMORE
STANDARD DETAIL

Dwn: KY	Date: May-13
Ckd: Spec. Committee	Scale: NONE

City Engineer

NO. L-19C

L20.DWG

Botanical Name: Common Name	GROUNDCOVER CHARACTERISTICS													ENVIRONMENTAL TOLERANCE											COMMENTS
	HEIGHT		VIGOR			ROOTING			LEAF SIZE			FLOWER		EXPOSURE			SOIL				FROST		DRO-UGHT		
	Low	Tall	Slow	Moderate	Fast	Shallow, Surface	Deep		Fine	Medium	Coarse	Showy	Not Showy	Sun	Partial Shade	Deep Shade	Good Drainage	Poor Drainage	Boron Contaminated	Sodium Contaminated	Yes	No	Yes	No	
Achillea Clavennae : Silver Yarrow	●			●		●				●		●		●			●				●		●		Can Mow Periodically
Achillea Millefolium : Yarrow		●		●		●				●		●		●	●		●				●		●		Can Mow Periodically
Achillea Millefolium 'Rosea' : Rose Yarrow		●		●		●				●		●		●	●		●				●		●		Can Mow Periodically
Asctostaphylos Uva-Ursi : 'Bearberry', 'Kinnikinnik'	●		●				●		●				●	●	●		●				●		●		Good for Slopes
Armeria Maritima : Sea Pink, Thrift	●			●			●		●			●		●			●				●		●		
Campanula Poscharskyana : Serbian Bellflower	●				●		●				●	●			●	●	●				●		●		
Carex Pansa : Meadow Sedge	●			●		●			●				●	●	●		●	●				●	●		Can Mow 2-3 Times/Year
Carex Praegracilis : Dune Sedge, Field Sedge		●		●		●			●				●	●	●		●	●				●	●		Can Mow 2-3 Times/Year
Carex Texensis : Texas Sedge, Catlin Sedge	●			●		●			●				●	●	●		●	●				●	●		Can Mow Periodically
Carex Divulsa (Tumulicola) : Berkeley Sedge		●		●		●			●				●	●	●	●	●	●				●	●		
Ceanothus Griseus Horizontalis : Carmel Creeper		●		●			●			●		●		●			●	●				●	●		
Ceanothus Hearstiroum : Hearst Ceanothus	●		●				●			●		●		●			●	●				●	●		
Chamaemelum Hobile : Chamomile	●			●		●				●		●		●	●		●				●			●	Can Mow Periodically
Coprosma X Kirkii : Creeping Coprosma		●		●		●			●				●	●			●	●			●			●	Good for Slopes
Coprosma 'Verde Vista'	●			●			●		●				●	●			●				●		●		Needs Tip Prunning
Correa 'Carmine Bells' : Australian Fuchsia		●		●			●			●		●		●			●					●	●		Good Drainage
Correa Pulchella : Australian Fuchsia		●		●			●			●		●		●			●					●	●		Good Drainage

GROUNDCOVER PLANTING GUIDE

NO. L-20A

CITY OF LIVERMORE
STANDARD DETAIL

Dwn: KY	Date: May-13
Ckd: Spec. Committee	Scale: NONE

City Engineer

L20.DWG

Botanical Name: Common Name	GROUNDCOVER CHARACTERISTICS													ENVIRONMENTAL TOLERANCE											COMMENTS
	HEIGHT		VIGOR			ROOTING			LEAF SIZE			FLOWER		EXPOSURE			SOIL				FROST		DRO-UGHT		
	Low	Tall	Slow	Moderate	Fast	Shallow, Surface	Deep		Fine	Medium	Coarse	Showy	Not Showy	Sun	Partial Shade	Deep Shade	Good Drainage	Poor Drainage	Boron Contaminated	Sodium Contaminated	Yes	No	Yes	No	
Cotoneaster dammeri 'Carol Beauty': Bearberry Cotoneaster		●		●			●		●				●	●	●		●		●	●	●		●		Needs Tip Pruning
Drosanthemum Hispidum : Red Apple Iceplant	●				●	●			●			●		●			●			●		●	●		
Dymondia Margaretae : Silver Carpet	●		●				●			●			●	●	●		●					●		●	
Festuca Glauca : Blue Fescue	●			●		●			●				●	●			●				●		●		
Festuca Idahoensis : Idaho Fescue	●			●		●			●				●	●	●		●				●		●		
Festuca Rubra : Red Fescue	●			●		●			●				●	●	●		●				●			●	
Fuchsia Procumbens : Prostate Fuschia	●			●		●				●			●		●		●					●		●	
Fragaria Chiloensis : Beach Strawberry	●			●		●				●		●		●			●			●	●			●	
Genista lydia : Broom	●			●			●		●			●		●			●		●	●	●		●		Accent Only
Hypericum calycinum : Aaron's Beard	●				●	●				●		●		●	●			●	●	●	●		●		Cut Back Regularly
Koelaria Macrantha : Junegrass		●		●		●			●				●	●			●	●				●	●		Good for Erosion Control
Lotus Scoparius : Deerweed		●		●					●			●		●			●	●				●	●		
Malvastrum Lateritium : Trailing Mallow	●				●	●				●		●		●			●	●				●	●		Good for Slopes
Myoporum Parvifolium 'Prostrata' : Myoporum	●				●	●			●				●	●			●					●		●	Good for Slopes
Nandina domestica 'Harbour Dwarf' : Heavenly Bamboo		●	●						●				●		●	●	●				●			●	Best with N.E. Exposure
Nepetaracemosa : Cat Mint	●				●	●				●		●		●			●				●			●	
Phyla Nodiflora : Lippia	●			●		●			●			●		●			●					●		●	Can Take Foot Traffic

GROUNDCOVER PLANTING GUIDE

CITY OF LIVERMORE
STANDARD DETAIL

Dwn: KY	Date: May-13
Ckd: Spec. Committee	Scale: NONE

City Engineer

NO. L-20B

L20.DWG

Botanical Name: Common Name	GROUNDCOVER CHARACTERISTICS													ENVIRONMENTAL TOLERANCE											COMMENTS
	HEIGHT		VIGOR			ROOTING			LEAF SIZE			FLOWER		EXPOSURE			SOIL				FROST		DRO-UGHT		
	Low	Tall	Slow	Moderate	Fast	Shallow, Surface	Deep		Fine	Medium	Coarse	Showy	Not Showy	Sun	Partial Shade	Deep Shade	Good Drainage	Poor Drainage	Boron Contaminated	Sodium Contaminated	Yes	No	Yes	No	
Rhamnus Californica 'Seaview Improved' : Coffeeberry		●	●				●			●			●	●	●		●					●	●		
Rosemarinus 'Huntington Blue' : Rosemary	●		●						●			●		●			●		●		●		●		Full Sun/Good Drainage
Salvia Melifera 'Terra Seca' : Prostrate Saga		●		●			●		●				●	●			●					●	●		
Salvia Sonomensis : Creeping Sage	●			●			●			●		●		●			●					●	●		
Salvia Spathacea : Pitcher Sage, Hummingbird Sage		●		●			●			●		●		●			●					●	●		
Thymus Pseudolanuginosus : Wooly Thyme	●				●	●			●				●	●	●		●				●			●	
Thymus Serpyllum : Creeping Thyme	●				●	●			●				●	●	●		●				●			●	
Vinca minor : Dwarf Periwinkle	●		●							●		●				●		●						●	Shade Only/Good Soil
Whipplea Modesta : Western Modesty, Yerba de Selva	●			●		●			●			●			●	●	●					●		●	
Zauschneria (Epilobium) Septentrionalis : California Fuschia	●				●		●			●		●		●	●		●					●	●		

GROUNDCOVER PLANTING GUIDE

NO. L-20C

CITY OF LIVERMORE
STANDARD DETAIL

Dwn: KY	Date: May-13
Ckd: Spec. Committee	Scale: NONE

City Engineer

BIORETENTION SWALE AND PLANTER DESIGN GUIDANCE

1. Longitudinal slope of swales shall be between 0.5% and 5%. Swales of greater than 3% may be required to install check dams to reduce velocity through the swale.
2. All swales shall and planters be required to provide an adequate underdrain system to prevent ponding with a minimum of 0.5% slope.
3 Swales and planters shall be designed to eliminate any ponding of water for more than 48 hours.
4. Side slopes shall not exceed 2:1, horizontal: vertical.
5. Erosion control practices must be implemented and maintained until such a time that the vegetation in the swale has established allowing the proper function of the drainage area as a "bioswale".
6. Swale bottom must be graded flat to improve pollutant removal. Swale bottom should ideally be at least 4–6 feet wide, with a minimum of 2 feet wide. Properly designed swales should resemble more of a flat–soft "U" shape rather than a sharp "V" ditch shape.
7. Swales shall be designed and sized to meet the latest requirements indicated in section C.3 of the City's NPDES permit with the Regional Water Quality Control Board (see Alameda County clean Water Program Technical Manual for: guidance at www.cleanwaterprogram.org):

   Generally, swales provided should collect runoff from the contributing drainage area using the general guideline of 0.04 sq.ft. of swale for each 1 sq.ft. of contributing drainage area.
8. For swales proposed in residential street parkway strips, the minimum width allowed should be 12 feet, with 15 feet or more recommended.
9. Maintenance of swales will be the responsibility of the property owner for residential and commerical/industrial applications, or a homeowner's association for residential common areas.
10. Swales will require sufficient irrigation to establish and maintain complete vegitation coverage. vegitation damaged due to ponding, erosion, insufficient irrigation, or other problems, it must be replaced. Turf shall be mowed as needed to maintain a 4–6 inch grass height.
11. Soil specifications for storm water measures shall be used for bio–retention soils. This specification is available at "www.cleanwaterprogram.org".

User note:

These details shall be used in conjunction with all the City standard details and specifications. Refer to the City standard specifications for the materials, installation, testing, protective coatings, and other requirements.

Date:	By:	Rev:

L–21B.DWG

BIORETENTION SWALE & PLANTER DESIGN GUIDANCE

CITY OF LIVERMORE
STANDARD DETAIL

Dwn: MM	Date: May–13	No.
Ckd: Spec. Committee	Scale: None	L–21A

City Engineer

BIO–RETENTION SWALE DESIGN GUIDANCE–(Continued)%%

12. Swales must be densely vegetated with conventional turf, approved alternatives to conventional turf, or other approved vegetation as referenced in the Bioswale Plant List shown below.
13. Areas of a site used for grass swales or other stormwater treatment are required to meet the City's Water Efficient Landscaping requirements.

Highest Zone

Acer negundo	Box Elder
Acer rubrum	Red Maple
Acer saccharinum	Silver Maple
Alnus spp.	Alder
Betula spp.	Birch
Carya illinoensis	Pecan
Carya ovata	Buttonbush
Casuarina spp.	She-Oak
Clethra arborea	Lily-of-the-Valley
Cornus stolonifera	Redtwig Dogwood
Diospyros virginiana	Persimmon
Eucalyptus camalduensis	Red Gum
E. citriodora	Lemon Gum
E. erythrocorys	Red-Cap Gum
Fraxinus latifolia	Oregon Ash
Gleditsia triacanthos	Honey Locust
Liquidambar styraciflua	Liquidambar
Liriodendron tulipifera	Tulip Tree
Magnolia grandiflora	Southern Magnolia
M. virginiana	Sweet Bay
Melaleuca quinquenervia	Cajeput Tree
Nyssa sylvatica	Tupelo
Picea sitchensis	Sitka Spruce
Platanus x acerifolia	London plane
Platanus occidentalis	Sycamore
P. racemosa	California Sycamore
Populus deltoides	Cottonwood
Pterocarya stenocarpus	Wingnut
Quercus macrocarpa	Bur Oak
Q. palustris	Pin Oak
Salix spp.	Willow
Sequoia sempervirens	Coast Redwood
Taxodium distichum	Bald Cypress
Thuja occidentalis	Arborvitae

Middle Zone

Cornus stolonifera	Redtwig Dogwood
Gaultheria shallon	Salal
Equisetum hyemale	Horsetail
Ferns (many spp.)	Fern
Iris (many spp.)	Iris
Mimulus	Monkeyflower
Miscanthus sinensis	Japanese Silver Grass
Myoporum parvifolium	Myoporum
'Putah Creek'	
Myrica	Pacific Wax Flower
Salix spp.	Willow
Vaccinium	Huckleberry

Lowest Zone

Acorus gramineus	Acorus
Carex spp.	Sedge
Deschampsia caespitosa	Tufted Hairgrass
Iris (many spp.)	Iris
Leucothoe davisiae	Sierra Laurel
Scirpus cernuus	Bulrush
Juncus spp.	Rush
Tradescantia virginiana	Spiderwort
Typha latifolia	Common Cattail

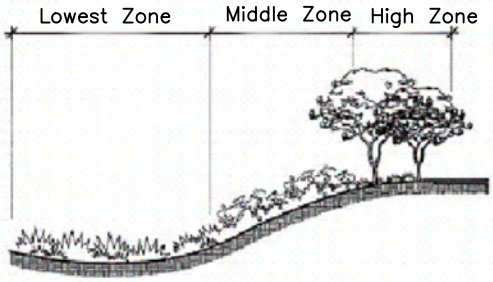

User note:
These details shall be used in conjunction with all the City standard details and specifications. Refer to the City standard specifications for the materials, installation, testing, protective coatings, and other requirements.

Date:	By:	Rev:

BIO–RETENTION SWALE DESIGN GUIDANCE AND PREFERRED PLANT LIST

CITY OF LIVERMORE
STANDARD DETAIL

Dwn: MM	Date: May–13	No.
Ckd: Spec. Committee	Scale: None	L–21B

City Engineer

L–21C.DWG

LANDSCAPE GENERAL DESIGN GUIDELINE REQUIREMENTS

The following is a list of City ordinances, policies, and regulations with landscape related requirements applicable in the City which may apply including but not limited to:

1. Tree preservation ordinance (see Chapter 12.20 Livermore Municipal Code, Article II);
2. The current Alameda Countywide Clean Water program requirements and published associated technical guidance;
3. The current California Building Standards applicable to the City of Livermore;
4. The landscape sections of any checklists or scorecards which may be required by City Ordinance including but not limited to the Civic Bay–Friendly Landscaping Ordinance (see Chapter 15.80 Livermore Municipal Code);
5. The Livermore Development Code (see Chapter 4.05 General Landscape Standards), the landscape standards applicable to the property zoning district, and any standards in Chapter 10)Subdivisions) which may apply;
6. The landscape section in the City od Livermore Design Standards and Guidelines Chapter which may be applicable;
7. The landscape standards in any applicable City Specific Plan that the property may be within.
8. For any additional plants not currently listed in City Stand Details L–18 through L–21 got to www.trivalleywaterwise.com.

User note:
These details shall be used in conjunction with all the City standard details and specifications. Refer to the City standard specifications for the materials, installation, testing, protective coatings, and other requirements.

Date:	By:	Rev:

BIORETENTION SWALE & PLANTER DESIGN GUIDANCE

CITY OF LIVERMORE
STANDARD DETAIL

Dwn: MM	Date: Feb–13	No.
Ckd: Spec. Committee	Scale: None	L–22

City Engineer

L–21B.DWG

CITY
OF
LIVERMORE

STANDARD DETAILS

TABLE OF CONTENTS

SANITARY SEWER AND STORM DRAIN - S

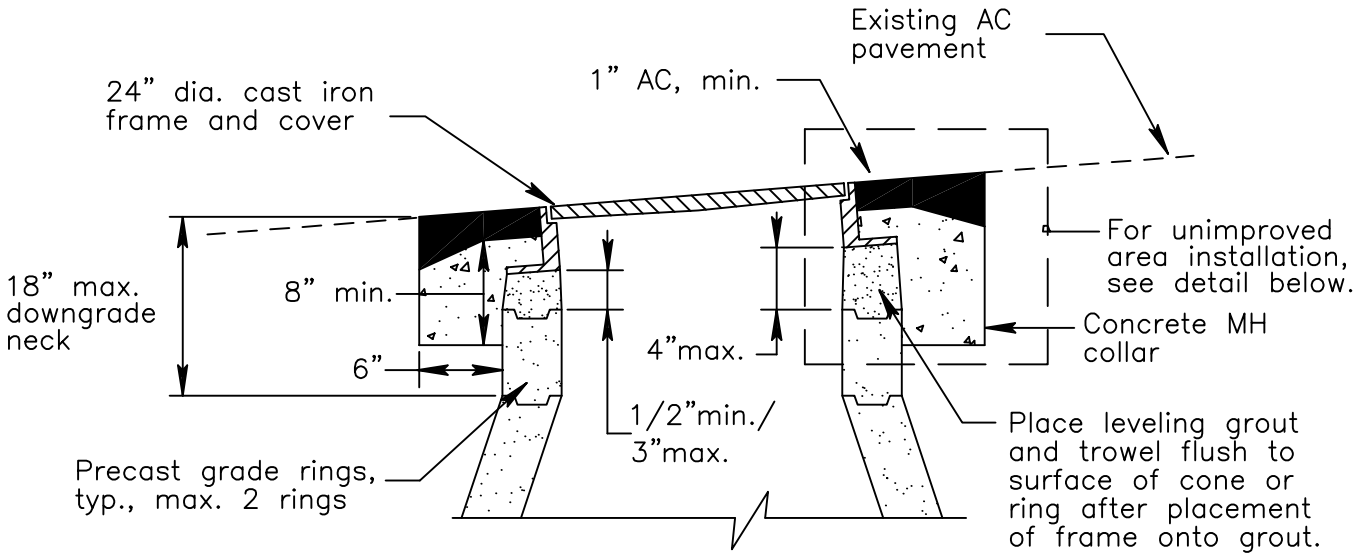

STREET PROFILE SECTION

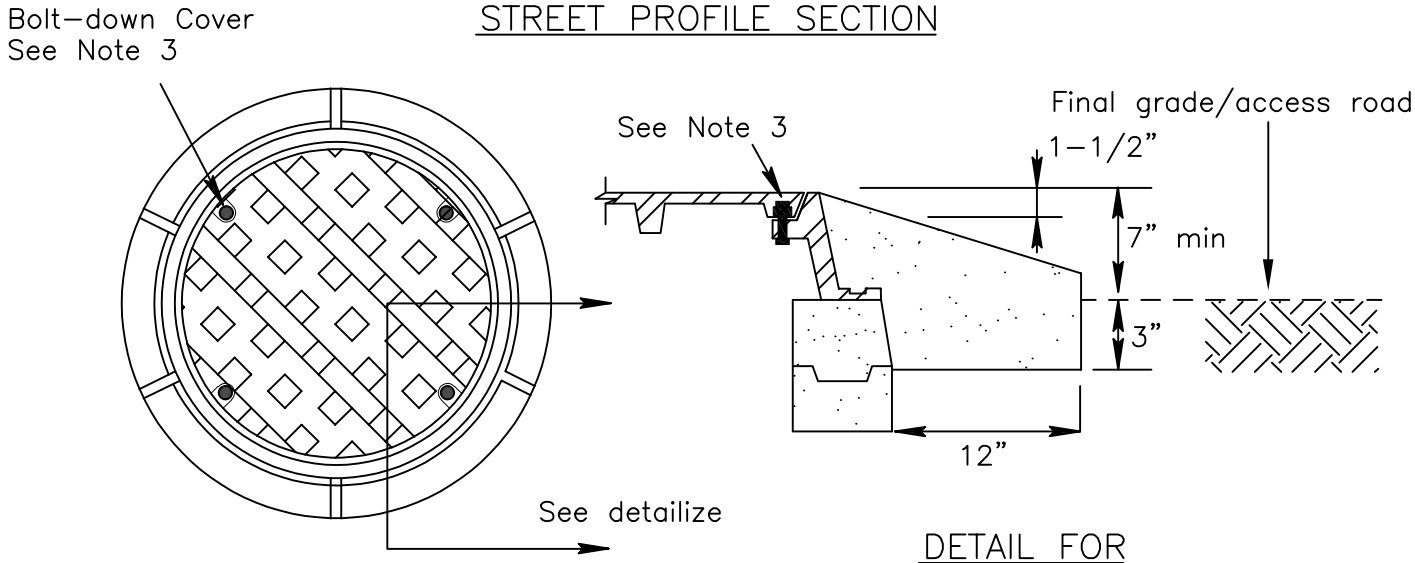

SANITARY SEWER MANHOLE

DETAIL FOR UNIMPROVED AREAS

Notes:

1. For Type I and Type II maintenance hole structures see S-2 or S-3.
2. Maintenance hole frame and cover to match road grade and cross slope within 0" TO + 1/8".
3. Bolt down frame and cover with four 1/2" x 2-1/2" stainless steel, hex head, recessed cap screws. Secure cover with screws, washers, and rubber gasket seals. Remove bolts upon completion of paving.

User note:
These details shall be used in conjunction with all the City standard details and specifications. Refer to the City standard specifications for the materials, installation, testing, protective coatings, and other requirements.

Date:	By:	Rev:

MAINTENANCE HOLE FRAME AND COVER

CITY OF LIVERMORE
STANDARD DETAIL

Dwn: M/W/HI	Date: Sept-22	No.
Ckd: Spec. Committee	Scale: None	S-1A

City Engineer

S01.DWG

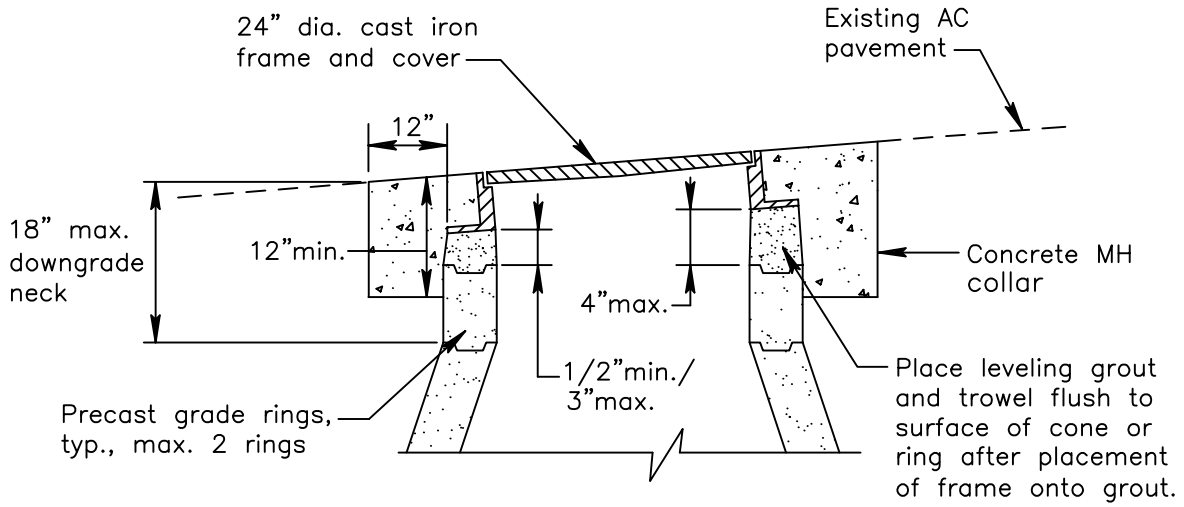

STREET PROFILE SECTION

Notes:

1. For Type I and Type II maintenance hole structures see S–2 or S–3.
2. Frame and cover shall be installed flush with finish grade +1/8" in paved areas. Frame on other streets and outside crossing zones shall be reset to grade when the the vertical offset is equal to or greater than 3/4".
3. Concrete shall be 7 sack, 1" max aggregate, 4000 psi with 6lbs of lampblack and 1.5lbs of engineered reinforcing fibers (fibermesh or equal) per cubic yard. Concrete shall be poured before 12 noon. Concrete shall be protected with steel trench plates until it can support traffic without damage, 3 days min.
4. When multiple structures are being set to grade work shall be phased so that vehicle traffic doesn't have to weave between obstruction. Coordinate work locations with the City Engineer.
5. Structures lowered for paving operations shall be referenced to points outside the work area so that they can be located accurately after paving. Said structures shall be lowered so that no portion is in conflict with the slowest grading plane. False bottoms shall be installed in all storm and sewage structures prior to lowering and shall be removed immediately after the frame and cover is reinstalled.
6. See Standard Detail G–1E for Arterials and Collectors Location Map

User note:
These details shall be used in conjunction with all the City standard details and specifications. Refer to the City standard specifications for the materials, installation, testing, protective coatings, and other requirements.

Date:	By:	Rev:

UTILITY FRAME AND COVER ADJUSTMENT FOR ARTERIALS AND COLLECTORS

CITY OF LIVERMORE
STANDARD DETAIL

Dwn: M/W/HI	Date: May–23	No.
Ckd: Spec. Committee	Scale: None	S–1B

City Engineer

S–1B.DWG

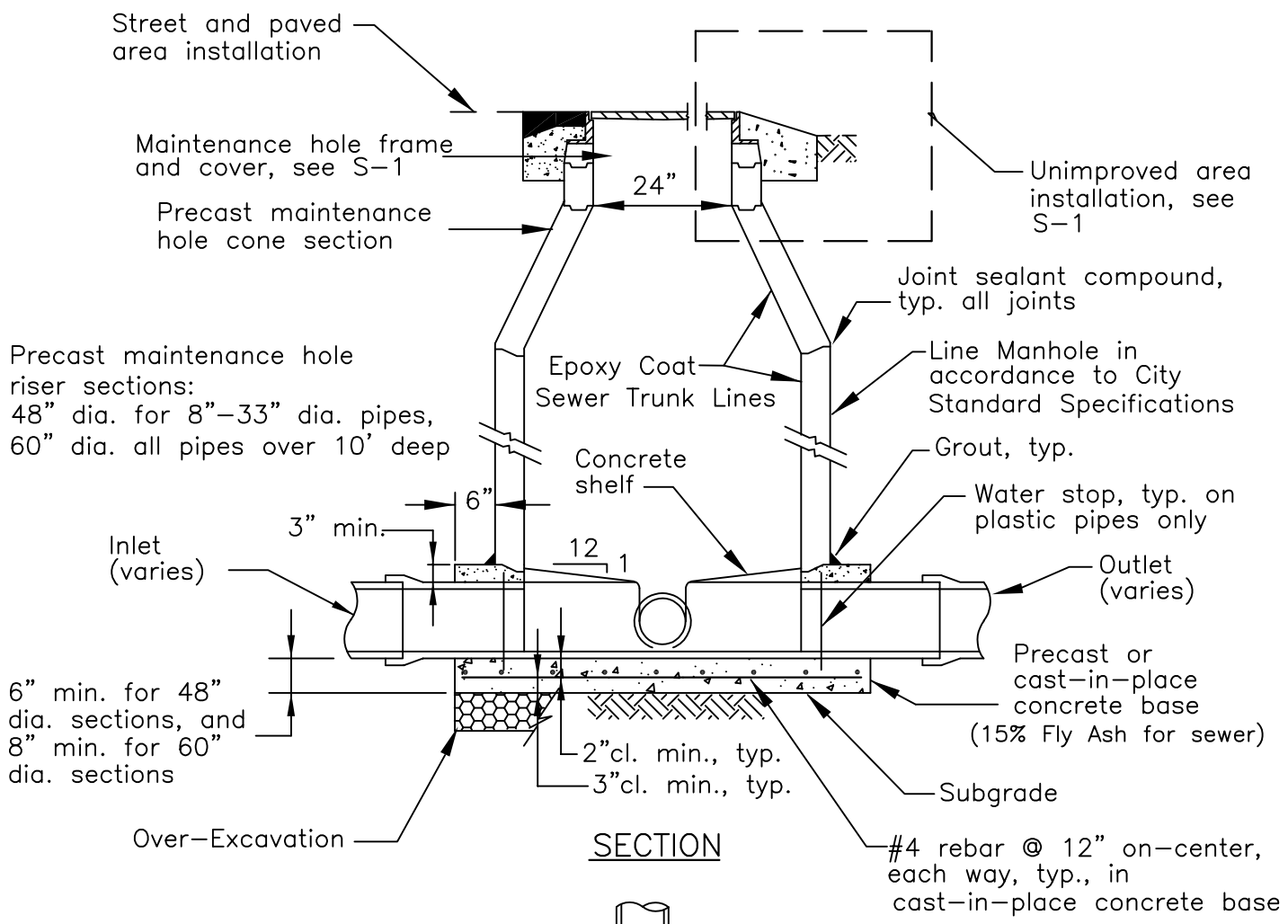

SECTION

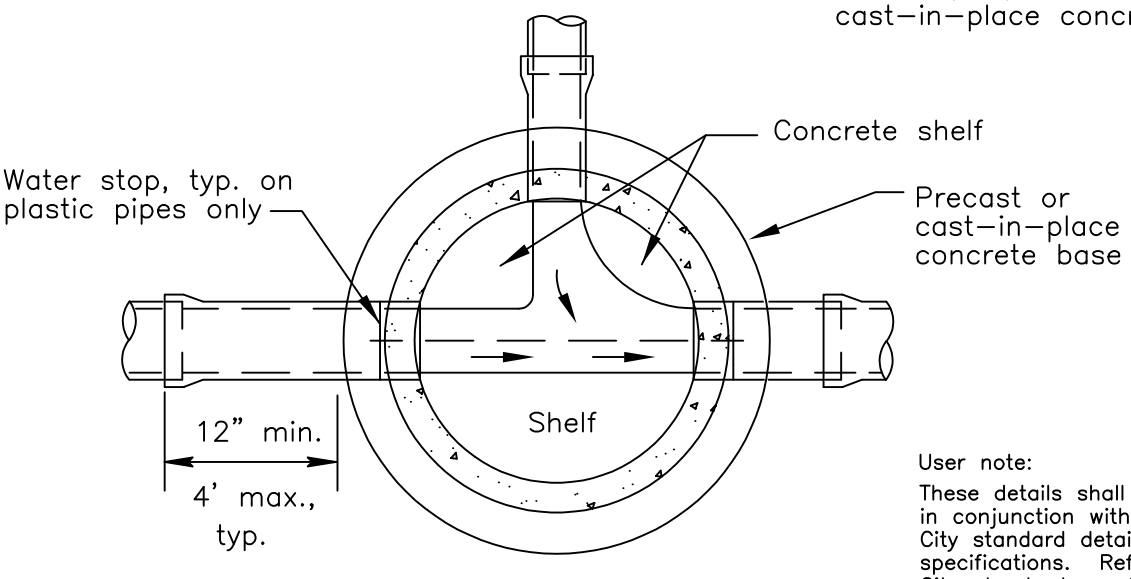

PLAN

User note:
These details shall be used in conjunction with all the City standard details and specifications. Refer to the City standard specifications for the materials, installation, testing, protective coatings, and other requirements.

See S-2B for allowable drop in maintenance hole.

Date:	By:	Rev:

TYPE I MAINTENANCE HOLE
8" TO 33" DIA. PIPES

CITY OF LIVERMORE
STANDARD DETAIL

Dwn: FY/HI	Date: May-23	No.
Ckd: Spec. Committee	Scale: None	S-2A

City Engineer

S02A.DWG

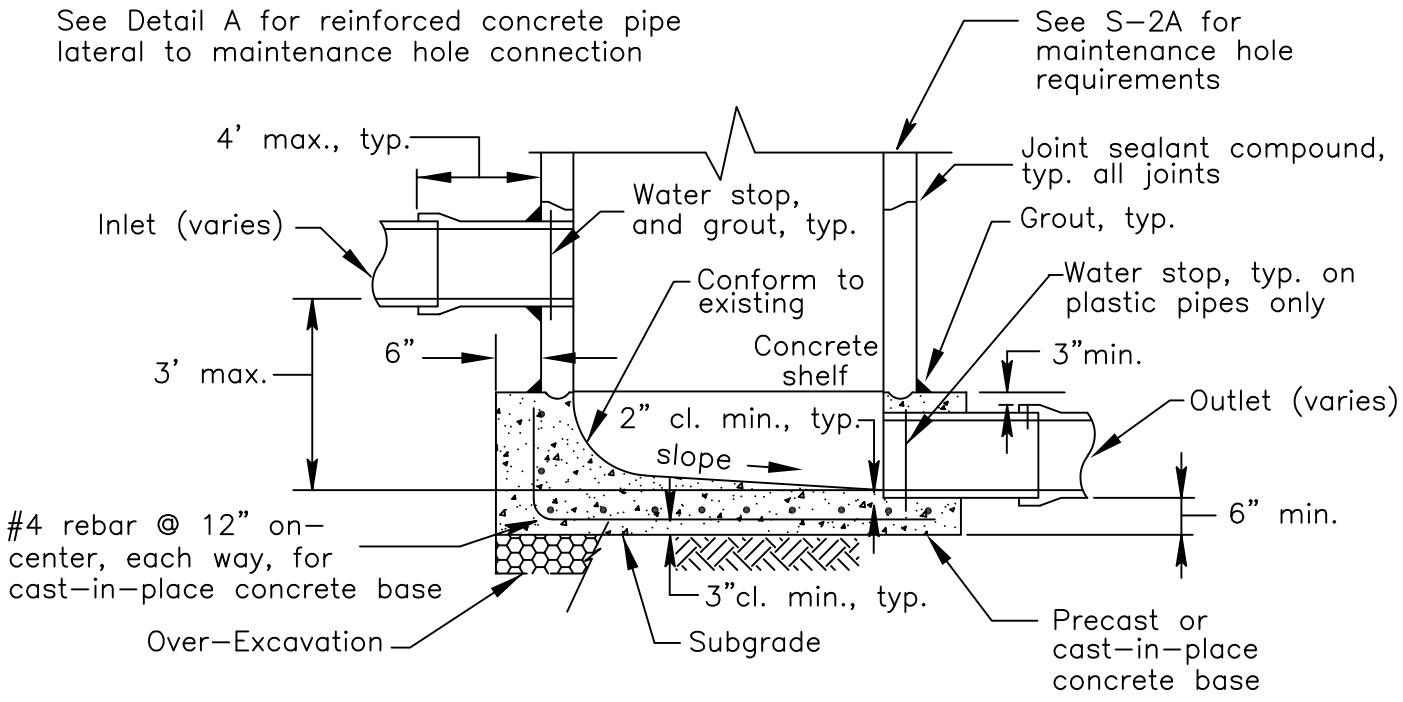

SECTION

ALLOWABLE DROP IN MAINTENANCE HOLE

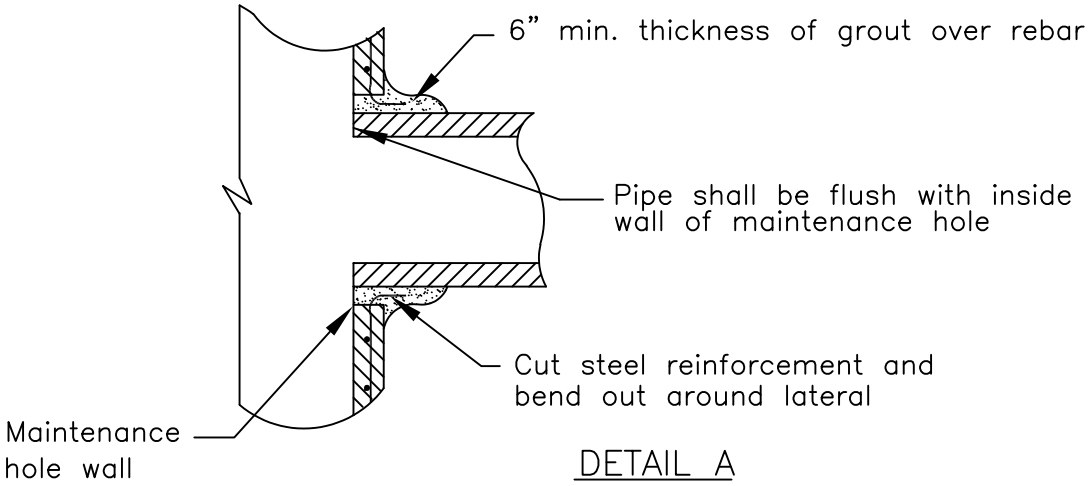

DETAIL A

RCP LATERAL TO MAINTENANCE HOLE WALL

Notes:

1. Drop in main line outside of maintenance hole is not allowed.

User note:

These details shall be used in conjunction with all the City standard details and specifications. Refer to the City standard specifications for the materials, installation, testing, protective coatings, and other requirements.

Date:	By:	Rev:

TYPE I MAINTENANCE HOLE

8" TO 33" DIA. PIPES

CITY OF LIVERMORE

STANDARD DETAIL

Dwn: FY	Date: May–13	No.
Ckd: Spec. Committee	Scale: None	S–2B

City Engineer

S02B.DWG

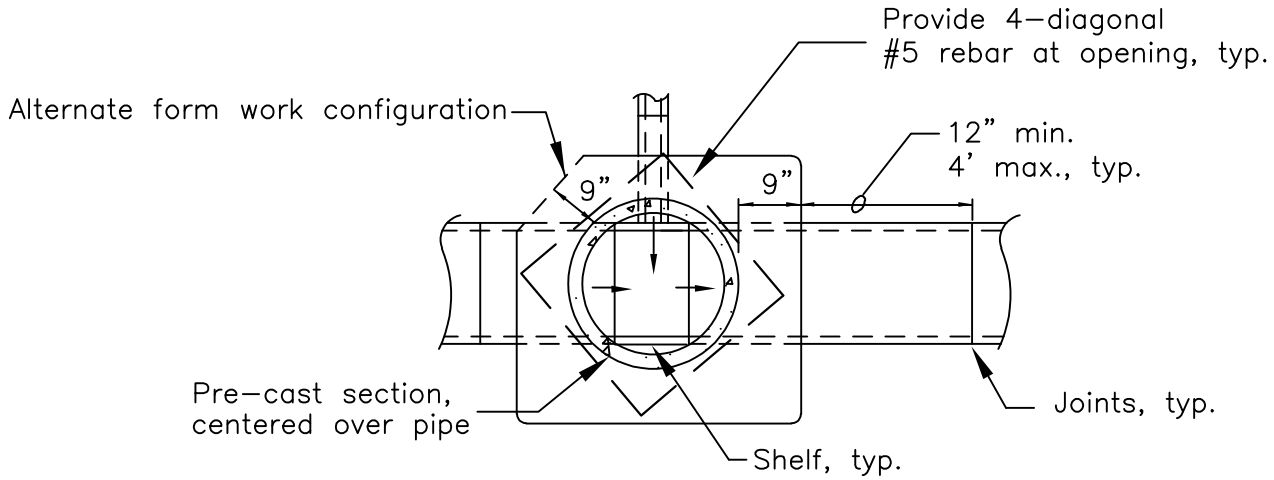

PLAN

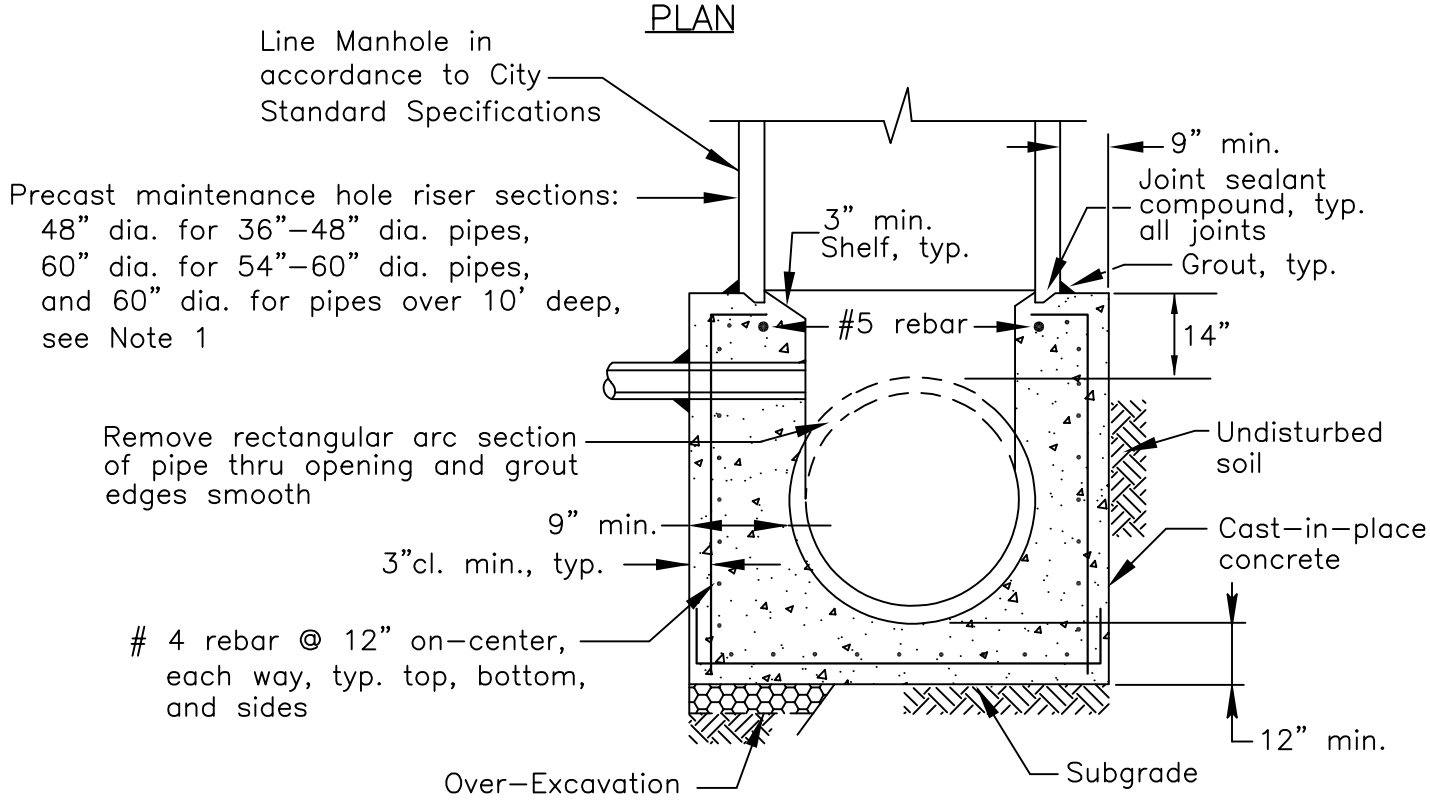

SECTION

Notes:

1. See S–2 for Type I maintenance hole requirements and notes.
2. For depths of cover greater than 20 feet or pipes larger than 60" diameter provide special engineered design prepared by licensed Civil Engineer.

User note:
These details shall be used in conjunction with all the City standard details and specifications. Refer to the City standard specifications for the materials, installation, testing, protective coatings, and other requirements.

Date:	By:	Rev:

TYPE II MAINTENANCE HOLE
36" TO 60" DIA. PIPES

CITY OF LIVERMORE
STANDARD DETAIL

Dwn: FY/HI	Date: May–23	No.
Ckd: Spec. Committee	Scale: None	S–3

City Engineer

S03.DWG

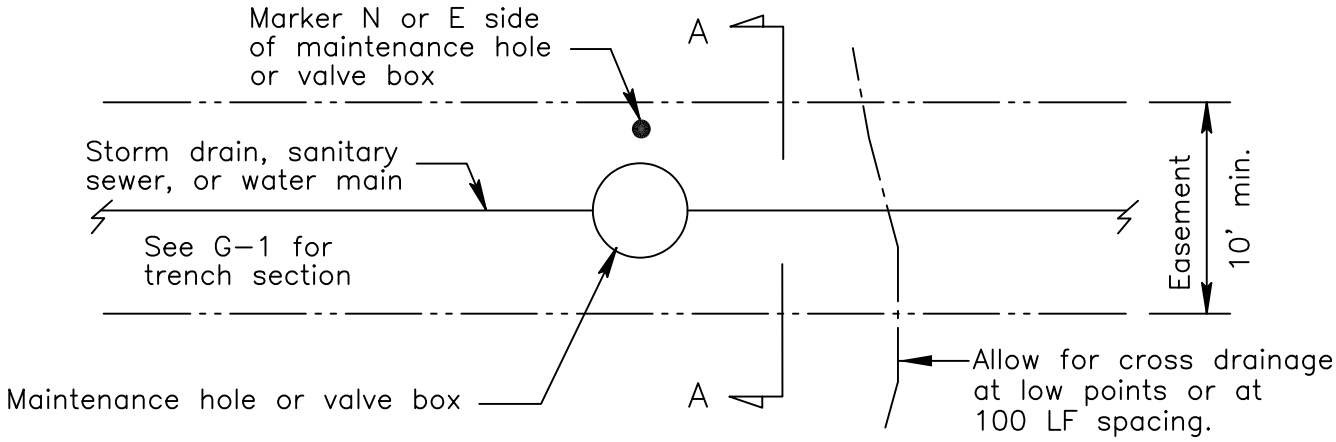

PLAN

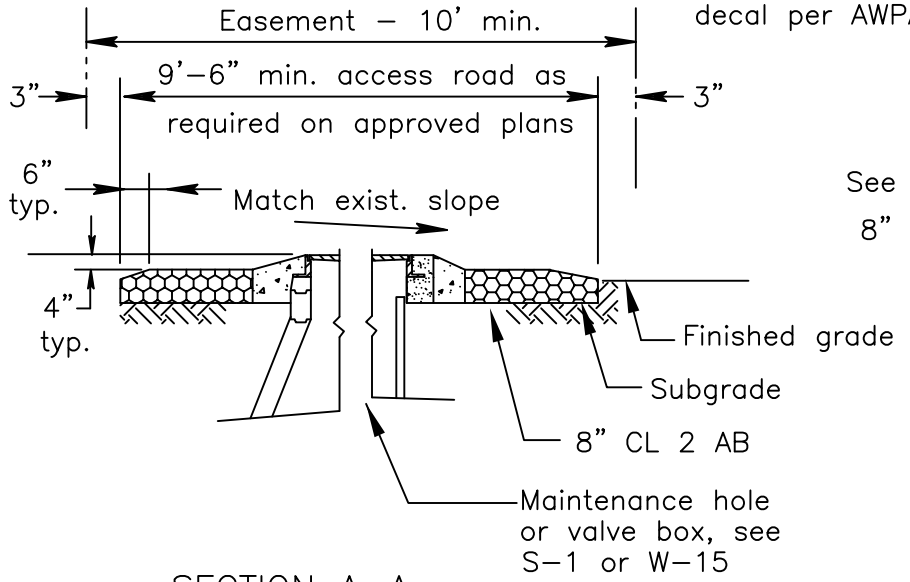

SECTION A–A

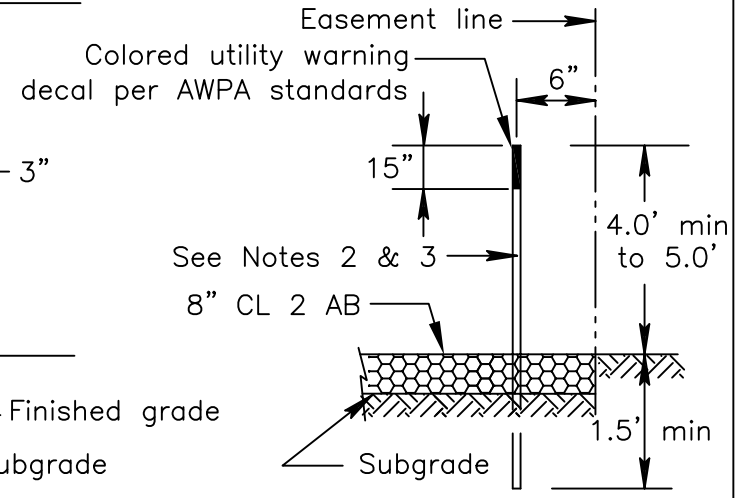

MARKER POST

Notes:

1. Provide locking MH frame and cover with curved, blind pick hole in all unimproved areas.
2. 4" wide 3 rail fiberglass marker post with UV protection coating. marker post to bend over when hit and snap back to normal upright position. Post shall be installed directly into soil and shall be colored per AWPA utility marking colors.
3. Provide Potable and Reclaim Water valve decals on marker post as follows to identify the type of valve: BV (butterfly valve), GV (gate valve), etc., approximately 12" down from the utility warning decal. Letters shall be 3" tall. and match color of the post. The decal background shall be white matching the utility warning label above.
4. Compaction of AB and subgrade shall be to 90% compaction in accordance with ASTM D1557.

User note:
These details shall be used in conjunction with all the City standard details and specifications. Refer to the City standard specifications for the materials, installation, testing, protective coatings, and other requirements.

Date:	By:	Rev:

UNIMPROVED AREA
UTILITY CONSTRUCTION

CITY OF LIVERMORE
STANDARD DETAIL

Dwn: W–HI	Date: Dec–22	No.
Ckd: Spec. Committee	Scale: None	S–4

City Engineer

S04.DWG

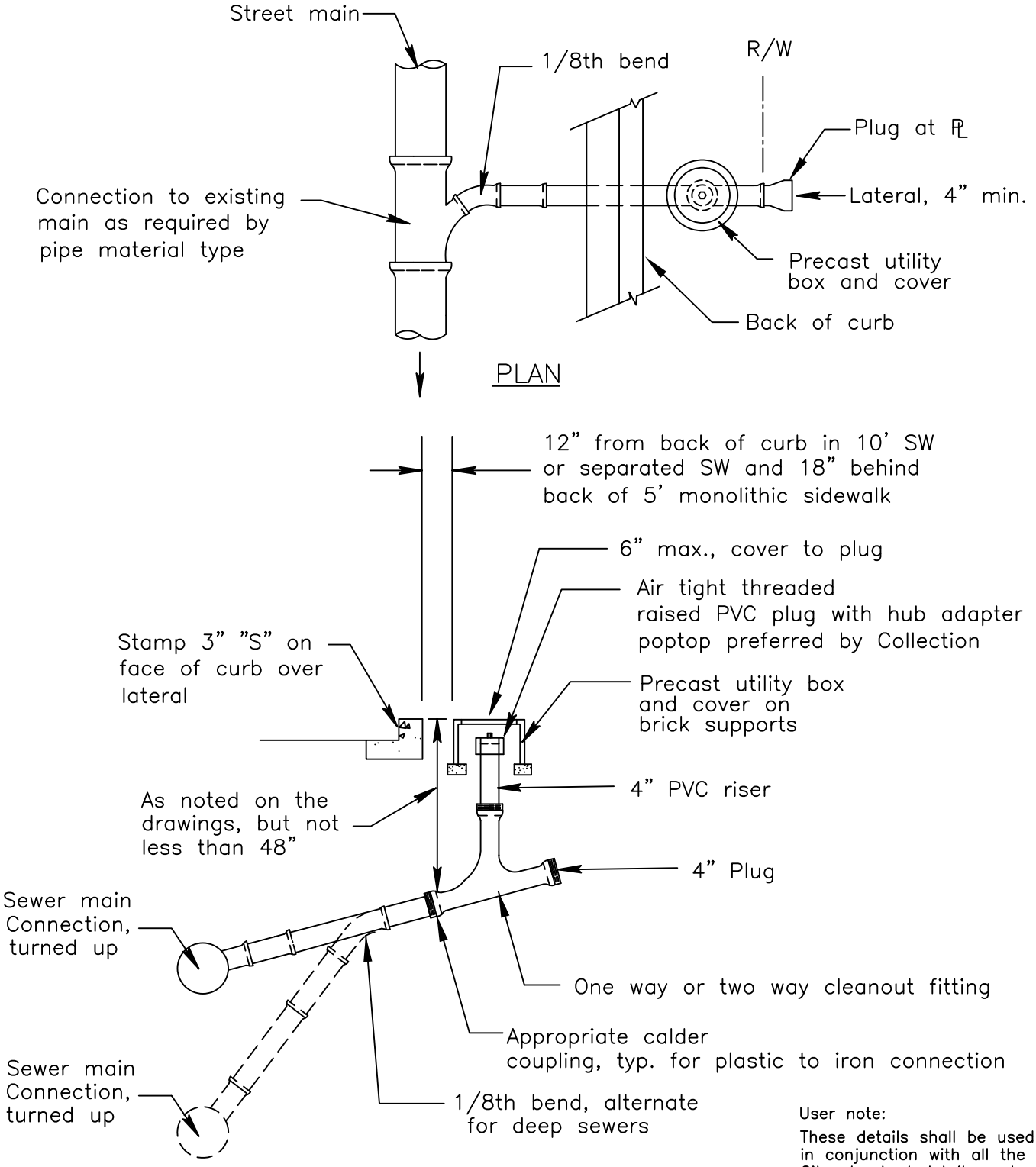

User note:
These details shall be used in conjunction with all the City standard details and specifications. Refer to the City standard specifications for the materials, installation, testing, protective coatings, and other requirements.

Date:	By:	Rev:

SANITARY SEWER LATERAL

CITY OF LIVERMORE
STANDARD DETAIL

Dwn: FY/HI	Date: Dec-22	No.
Ckd: Spec. Committee	Scale: None	S-5A

City Engineer

S05A.DWG

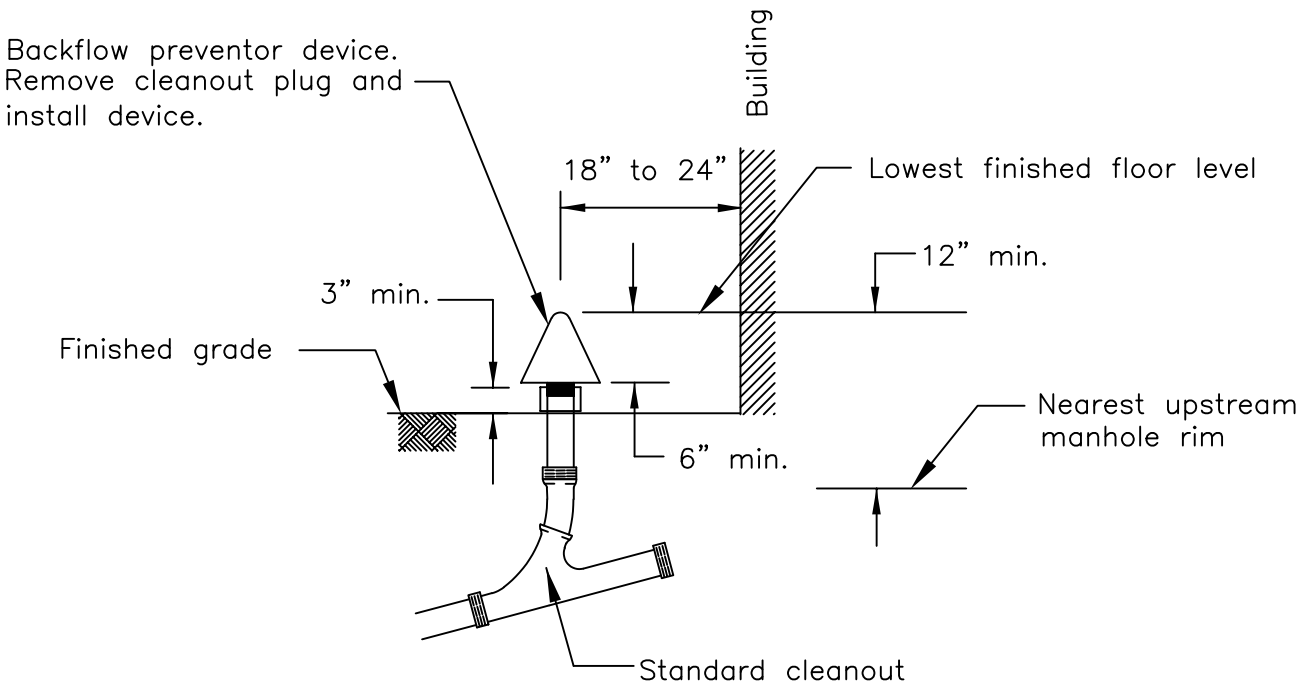

SANITARY SEWER BACKFLOW PREVENTOR

(See Note 5 for when installation is required)

Notes:

1. On laterals 6" and larger use 45° combination wye and 1/8th bend.
2. Riser material and size to be the same as lateral.
3. The minimum lateral slope shall be 1/4" per foot for 4" dia. pipe and 1/8" per foot for 6" dia. pipe.
4. All lateral piping and fittings shall be the same diameter.
5. Install sanitary sewer backflow preventor when the pad elevation is less than 12" above the nearest upstream sewer manhole rim or the finished floor (if known) is less than 12" above the nearest upstream sewer manhole rim.

User note:
These details shall be used in conjunction with all the City standard details and specifications. Refer to the City standard specifications for the materials, installation, testing, protective coatings, and other requirements.

Date:	By:	Rev:

SANITARY SEWER LATERAL
(NOTES AND BACKFLOW PREVENTOR)

CITY OF LIVERMORE
STANDARD DETAIL

Dwn: FY	Date: May-13	No.
Ckd: Spec. Committee	Scale: None	S-5B

City Engineer

S05B.DWG

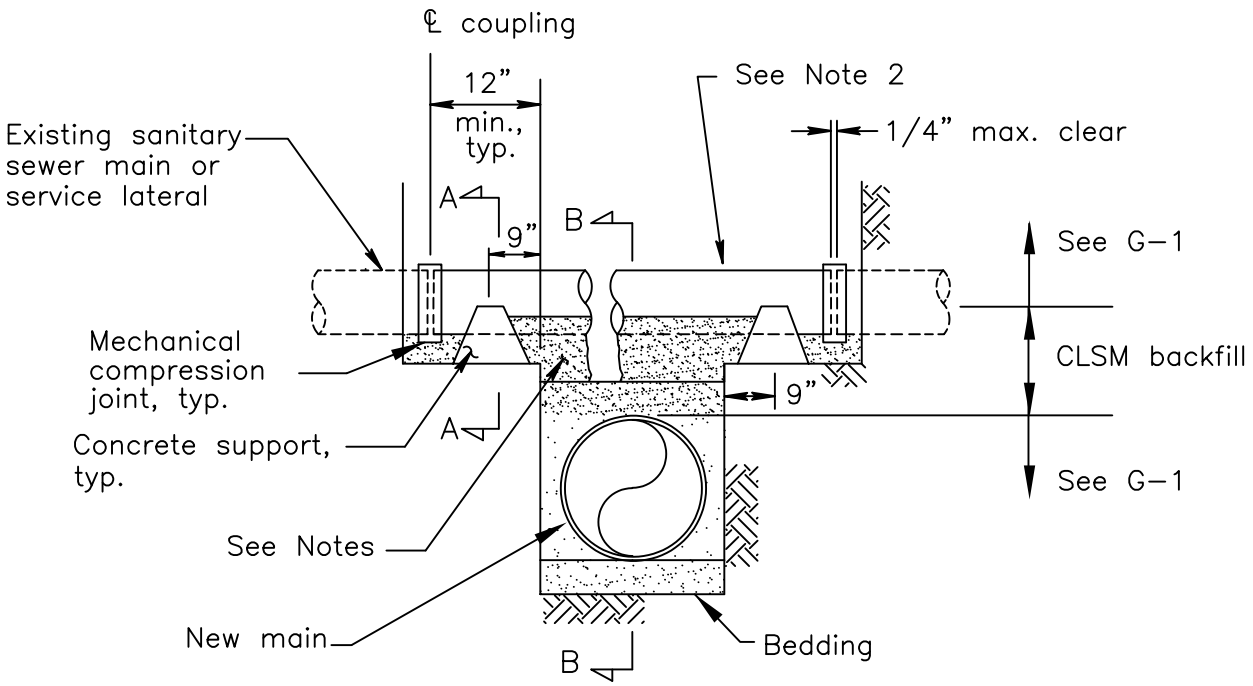

MAIN LINE SECTION

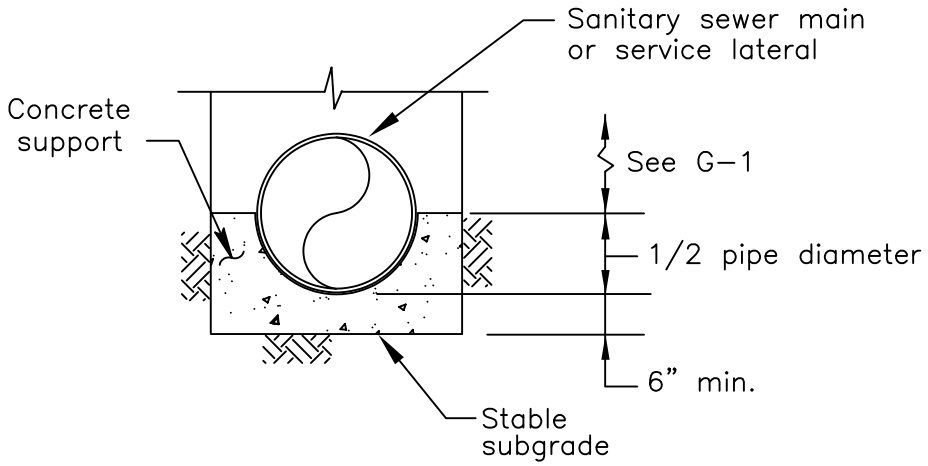

SECTION A–A

CONCRETE SUPPORT

User note:

These details shall be used in conjunction with all the City standard details and specifications. Refer to the City standard specifications for the materials, installation, testing, protective coatings, and other requirements.

Date:	By:	Rev:

SO6A.DWG

SANITARY SEWER CROSSING REPLACEMENT

CITY OF LIVERMORE

STANDARD DETAIL

Dwn: M–W	Date: May–13	No.
Ckd: Spec. Committee	Scale: None	S–6A

City Engineer

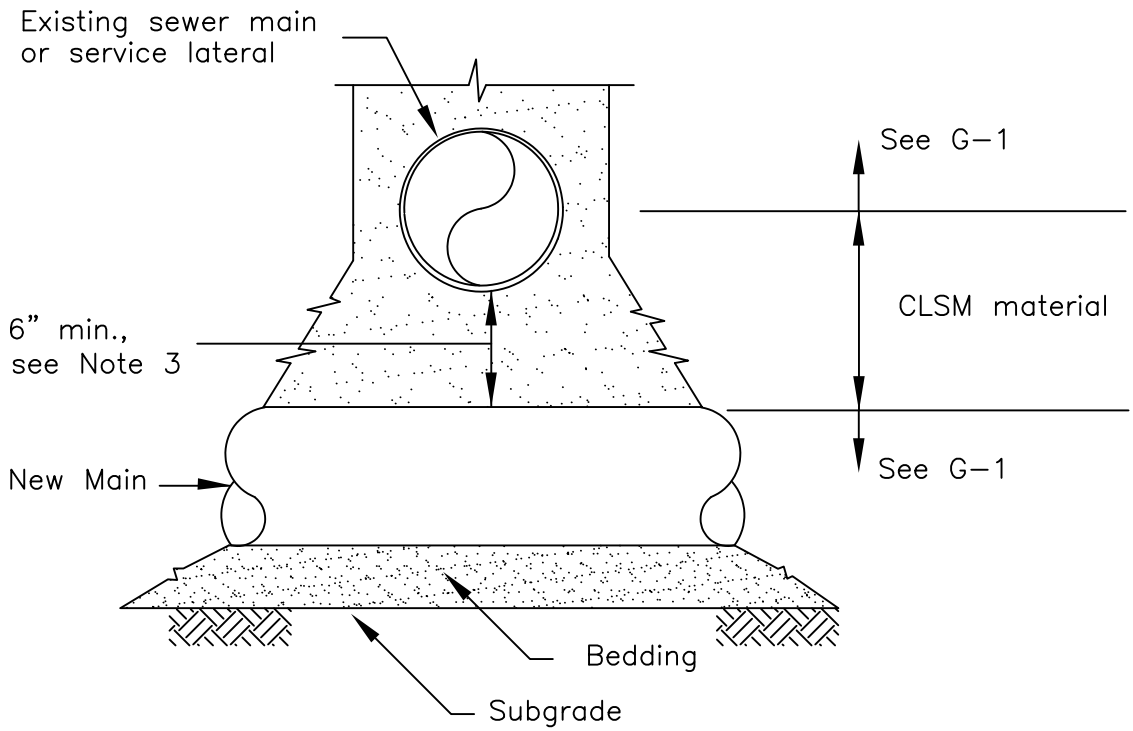

SECTION B – B

Notes:

1. If New Main is vitrified clay pipe, install banded rubber couplings on New Main at the limits of the Controlled Low Strength Material (CLSM) backfill.
2. Sanitary sewer crossing replacement to be used when: 1) New Water Main is being installed under existing sanitary sewer main or lateral; or 2) Existing sanitary sewer main or lateral is damaged; or 3) When directed by the ENGINEER.
3. Less than 6" clearance must be approved by the ENGINEER.
4. For New Mains (EXCEPT water) crossing under an existing sanitary sewer pipe and the existing sanitary sewer pipe is damaged, use pipe of the same material to replaced the damaged existing sanitary sewer pipe.
5. For New Water Main crossing under an existing sanitary sewer pipe, the sanitary sewer main or lateral and/or the New Water Main must comply with this detail and G–2.

User note:
These details shall be used in conjunction with all the City standard details and specifications. Refer to the City standard specifications for the materials, installation, testing, protective coatings, and other requirements.

Date:	By:	Rev:

SANITARY SEWER CROSSING REPLACEMENT

CITY OF LIVERMORE
STANDARD DETAIL

Dwn: M–W	Date: May–13	No.
Ckd: Spec. Committee	Scale: None	S–6B

City Engineer

S06B.DWG

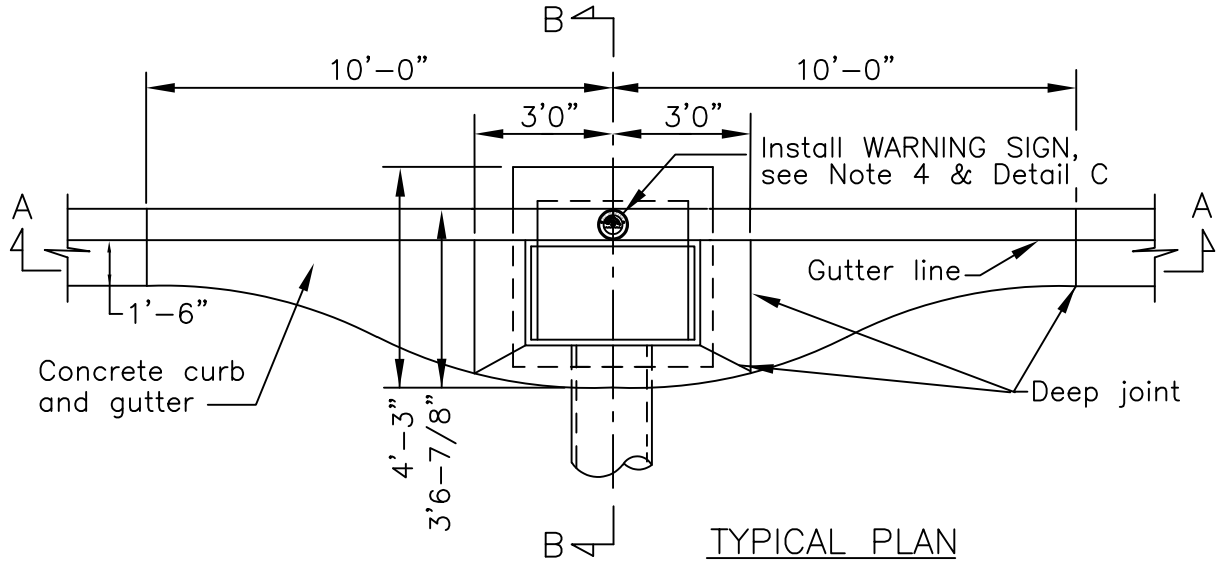

TYPICAL PLAN

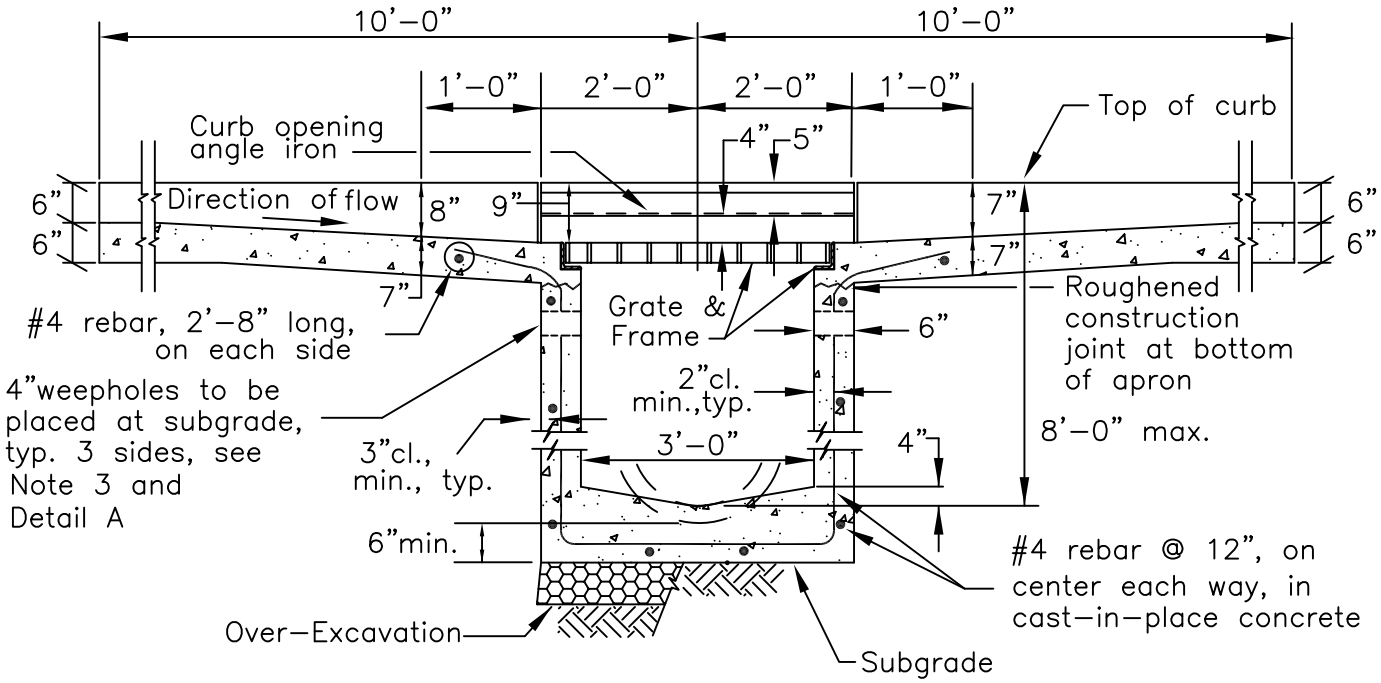

SECTION A–A

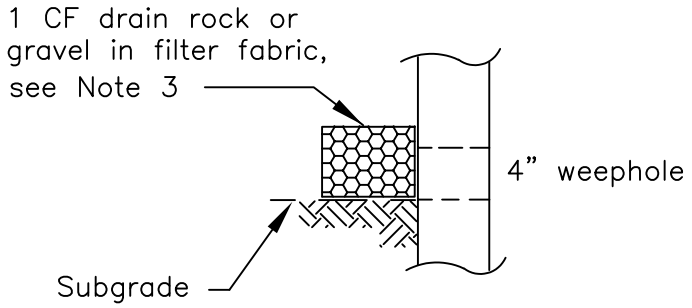

DETAIL A

User note:
These details shall be used in conjunction with all the City standard details and specifications. Refer to the City standard specifications for the materials, installation, testing, protective coatings, and other requirements.

Date:	By:	Rev:

STORM WATER CURB INLET
TYPE I
12" TO 30" DIA. PIPES

CITY OF LIVERMORE
STANDARD DETAIL

Dwn: M–W	Date: May–13	No.
Ckd: Spec. Committee	Scale: None	S–7A

City Engineer

S07A.DWG

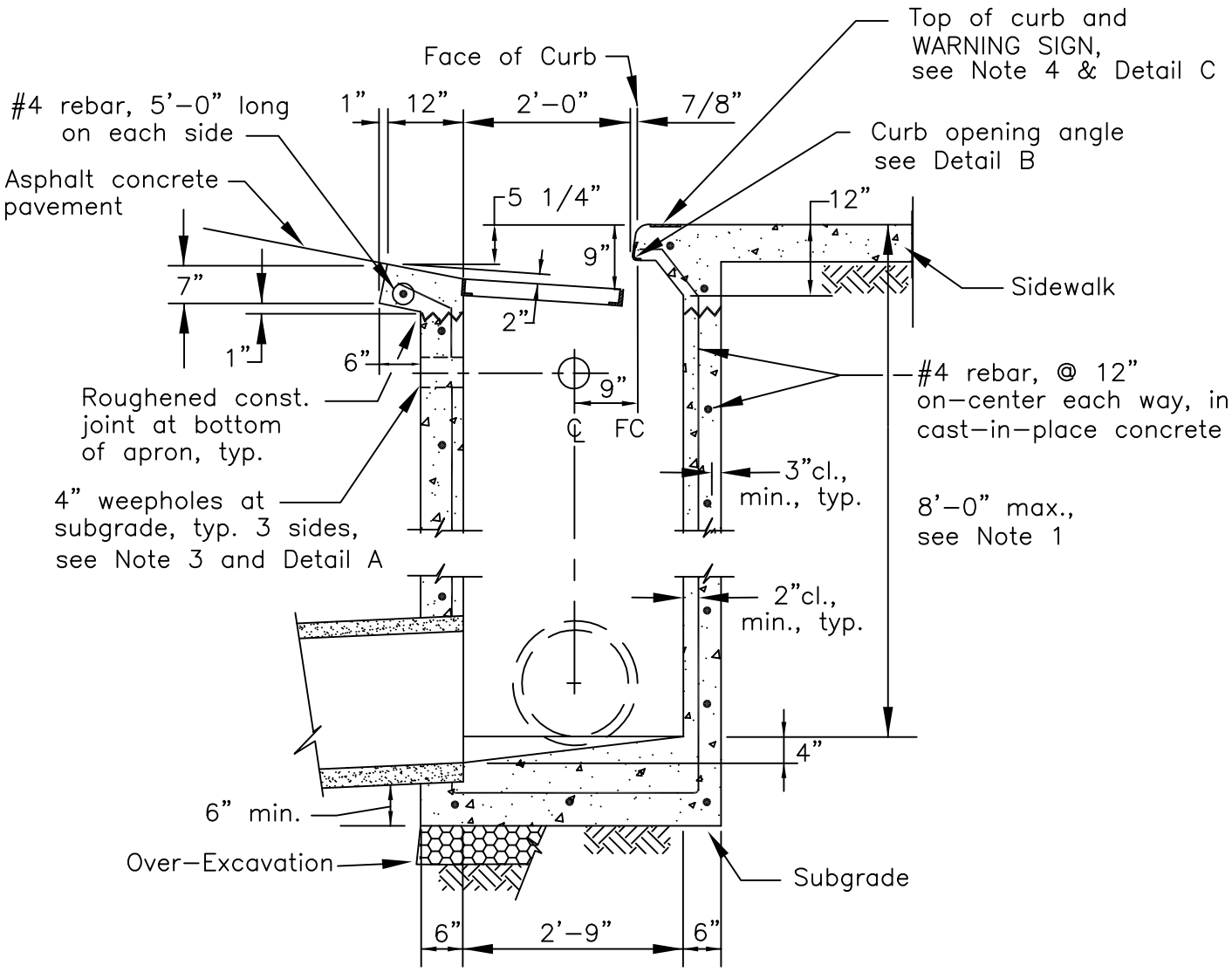

SECTION B–B

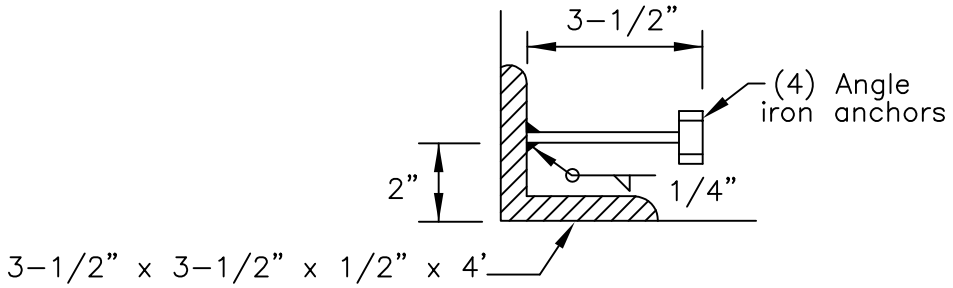

DETAIL B

User note:

These details shall be used in conjunction with all the City standard details and specifications. Refer to the City standard specifications for the materials, installation, testing, protective coatings, and other requirements.

Date:	By:	Rev:

S07B.DWG

STORM WATER CURB INLET
TYPE I
12" TO 30" DIA. PIPES

CITY OF LIVERMORE
STANDARD DETAIL

Dwn: M–W–HI	Date: May 23	No.
Ckd: Spec. Committee	Scale: None	S–7B

City Engineer

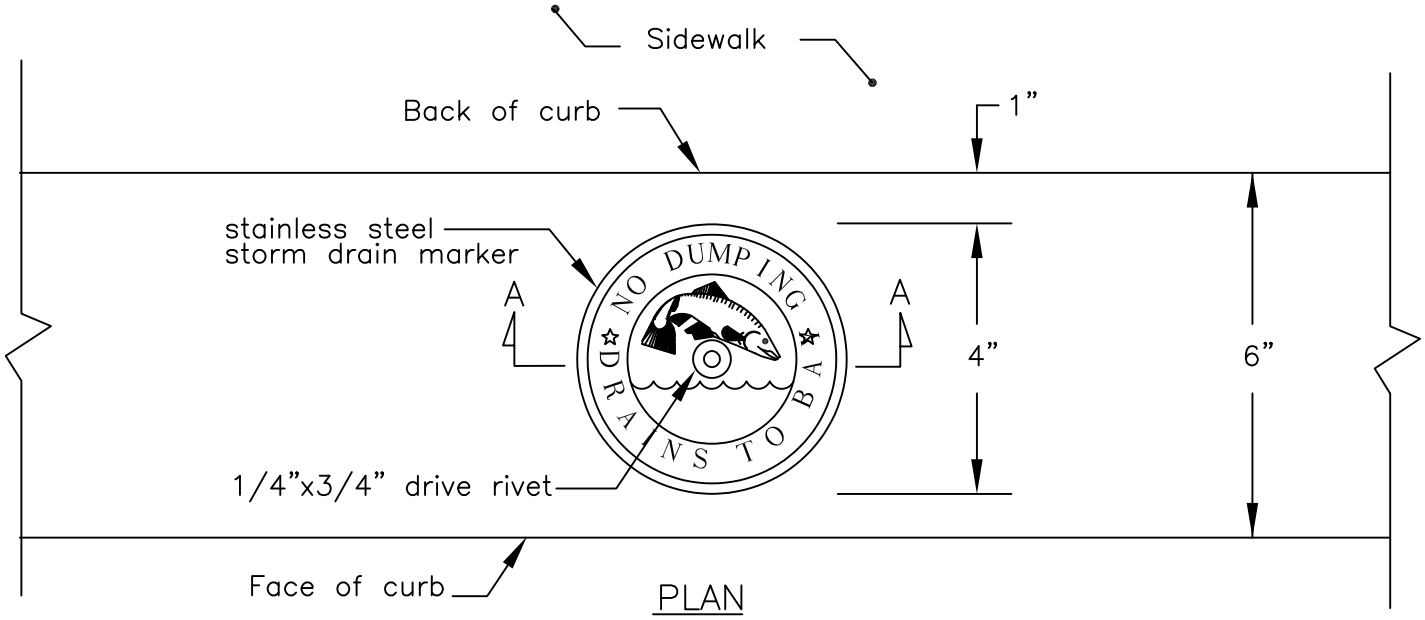

PLAN

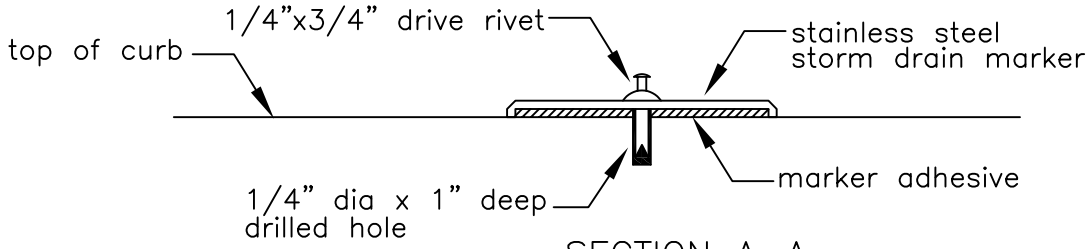

SECTION A–A

DETAIL "C" – STORM DRAIN MARKER

Notes:

1. For storm water inlets from 8'–0" to 10'–0" deep use Type II maintenance hole base, see S–3.
2. For field drop inlet installation, see S–9.
3. Weepholes on three sides. Place one cubic foot of drain rock in filter fabric behind each weephole.
4. Install 4" Dia Storm Drain Marker at each inlet. The stainless steel marker may be purchased from the City's Water Resources Division:

   101 West Jack London Blvd
   Livermore, CA 94550
   Phone: 925–960–8100

User note:
These details shall be used in conjunction with all the City standard details and specifications. Refer to the City standard specifications for the materials, installation, testing, protective coatings, and other requirements.

Date:	By:	Rev:

STORM WATER CURB INLET
TYPE I
NOTES

CITY OF LIVERMORE
STANDARD DETAIL

Dwn: FY	Date: May–13	No.
Ckd: Spec. Committee	Scale: None	S–7C

City Engineer

S07C.DWG

Construction of top of Curb Inlet per S–7A and S–7B, except for bar size and spacing.

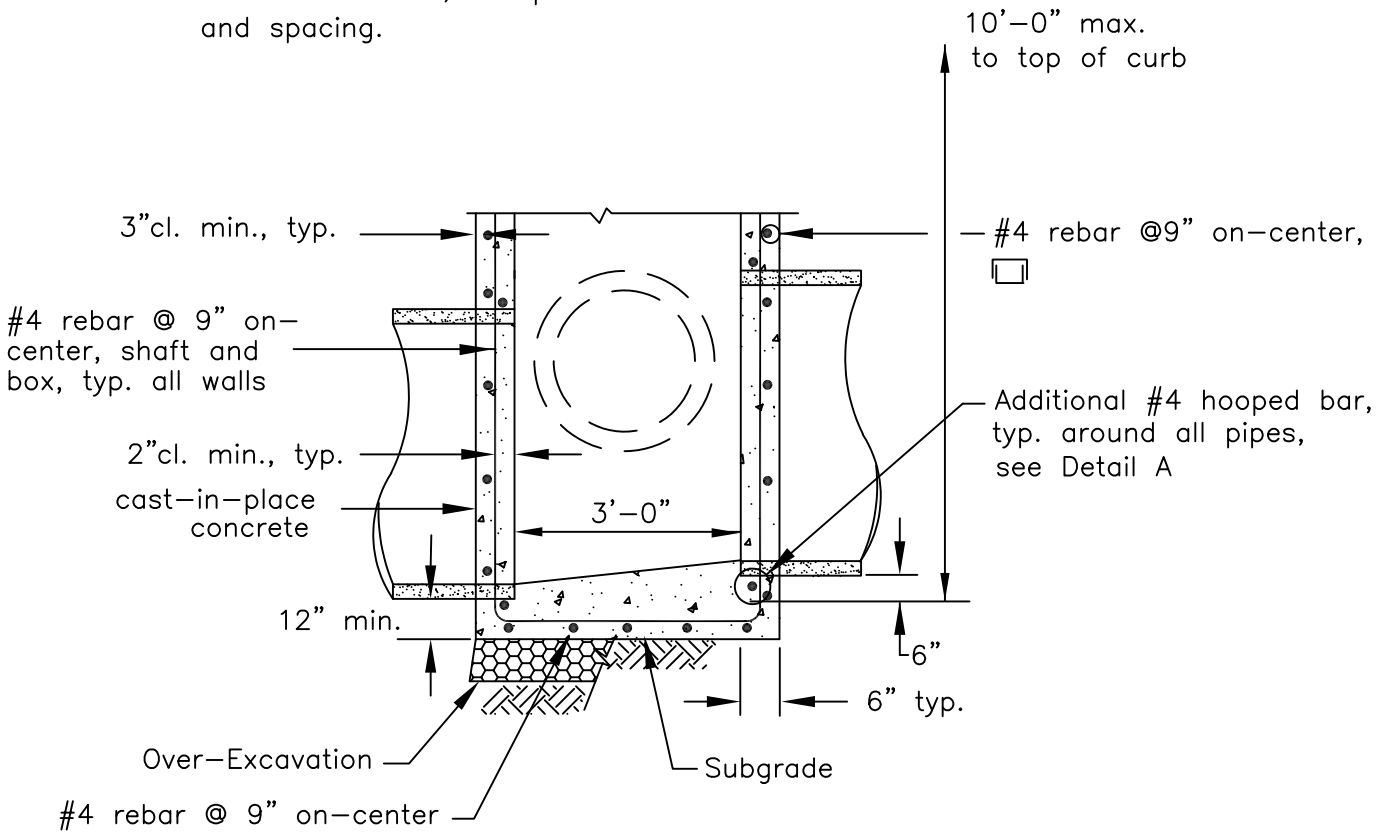

SECTION A–A

see S–7A

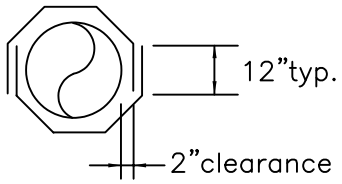

HOOPED BAR

DETAIL A

User note:
These details shall be used in conjunction with all the City standard details and specifications. Refer to the City standard specifications for the materials, installation, testing, protective coatings, and other requirements.

Date:	By:	Rev:	STORM WATER CURB INLET TYPE II 33" TO 60" DIA. PIPES	CITY OF LIVERMORE STANDARD DETAIL		No.
				Dwn: M–W	Date: May–13	S–8A
				Ckd: Spec. Committee	Scale: None	
				City Engineer		

S08A.DWG

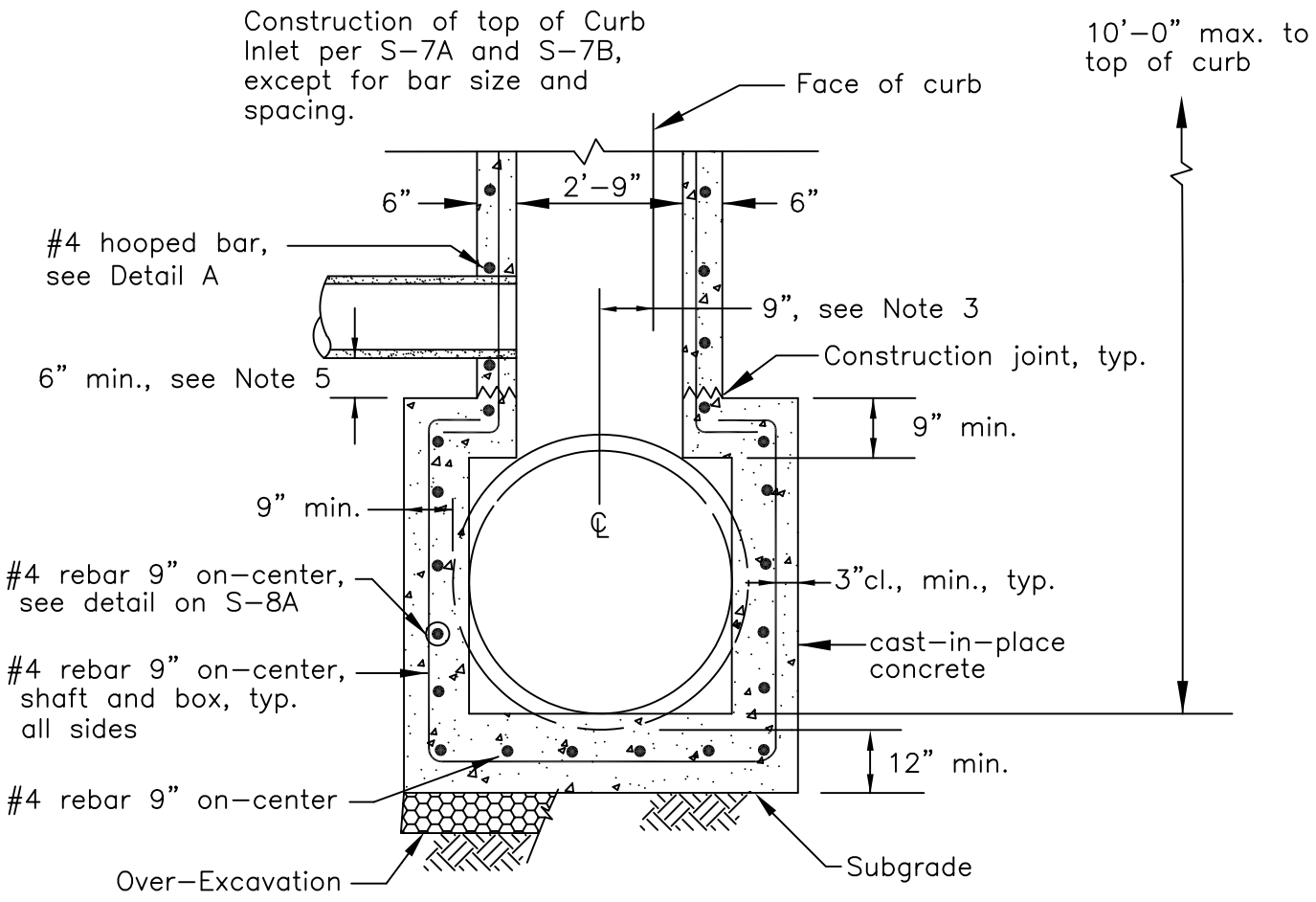

SECTION B–B

see S–7A

Notes:

1. For storm water curb inlets deeper than 10'–0" or for pipes larger than 60", provide special engineered design prepared by licensed Civil Engineer.
2. For field drop inlet installation, see S–9.
3. The 9" dimension from face of curb to storm drain main centerline is the standard offset for construction.
4. For top of Curb Inlet construction, see S–7A and S–7B.
5. For main/lateral connections other than as shown, provide special engineered design prepared by licensed Civil Engineer.

User note:
These details shall be used in conjunction with all the City standard details and specifications. Refer to the City standard specifications for the materials, installation, testing, protective coatings, and other requirements.

Date:	By:	Rev:

S08B.DWG

STORM WATER CURB INLET
TYPE II
33" TO 60" DIA. PIPES

CITY OF LIVERMORE
STANDARD DETAIL

Dwn: M–W	Date: May–13	No.
Ckd: Spec. Committee	Scale: None	S–8B

City Engineer

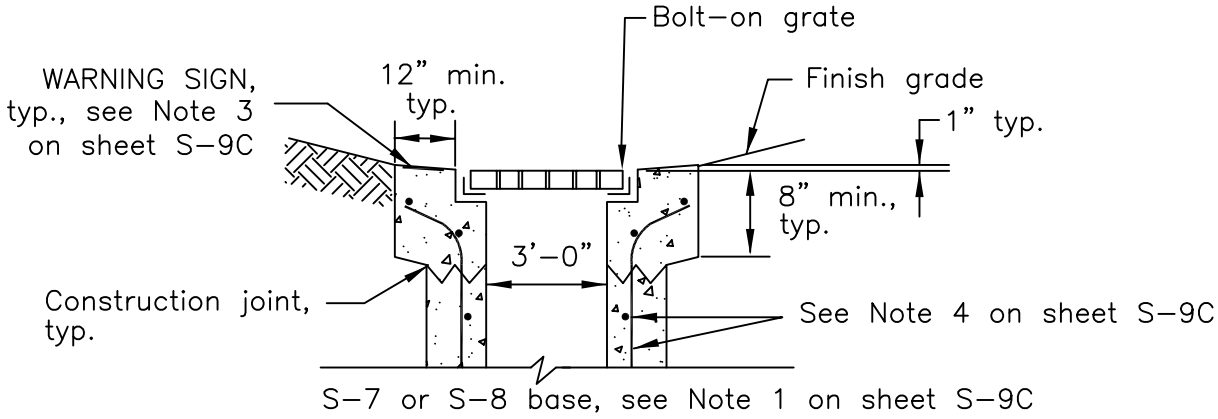

SECTION A–A

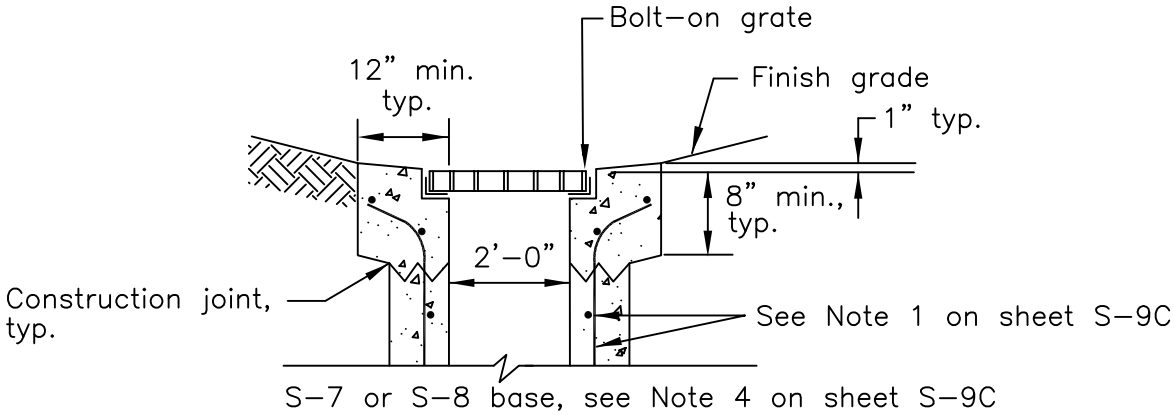

SECTION B–B

CAST–IN–PLACE CONCRETE

See S–9B for Plan View

User note:
These details shall be used in conjunction with all the City standard details and specifications. Refer to the City standard specifications for the materials, installation, testing, protective coatings, and other requirements.

Date:	By:	Rev:

S09A.DWG

STORM WATER
FIELD DROP INLET
UNIMPROVED/LANDSCAPED
AREAS

CITY OF LIVERMORE
STANDARD DETAIL

Dwn: FY	Date: May–13	No.
Ckd: Spec. Committee	Scale: None	S–9A

City Engineer

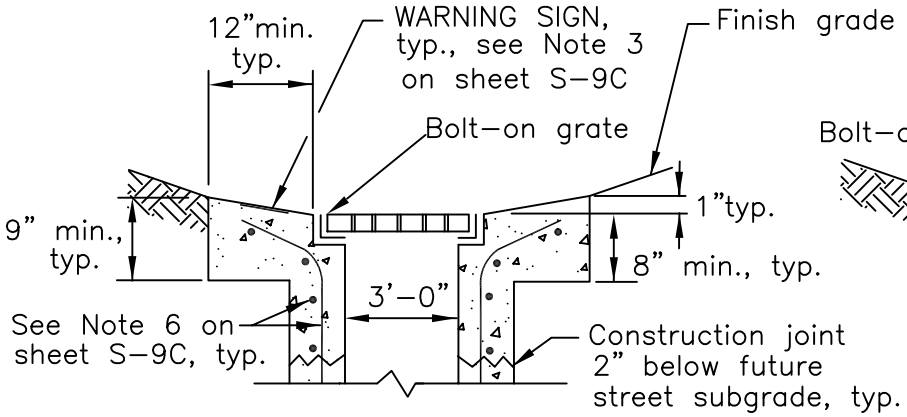

SECTION A–A

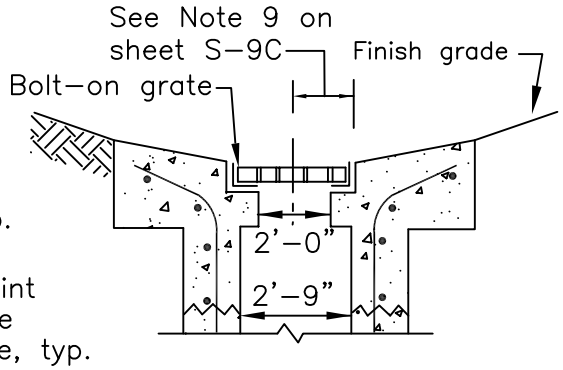

SECTION B–B

S–7 or S–8 base, see Note 6

CAST–IN–PLACE CONCRETE

(pre–cast not allowed)

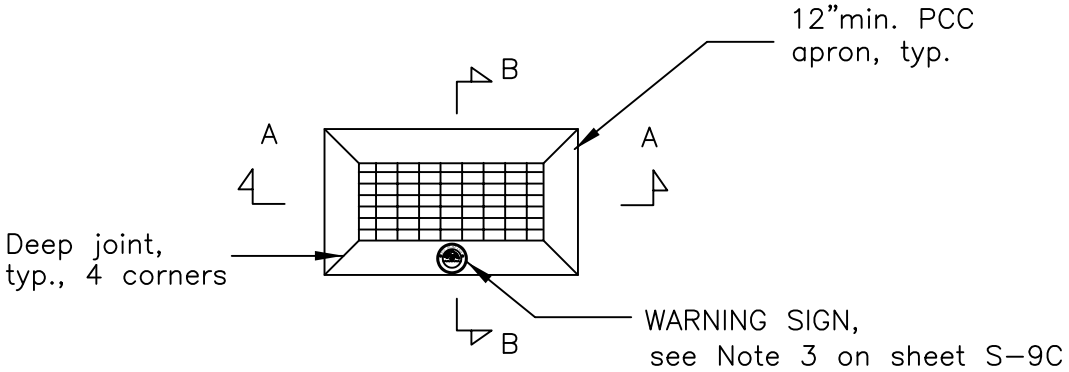

PLAN VIEW

CAST–IN–PLACE CONCRETE

User note:

These details shall be used in conjunction with all the City standard details and specifications. Refer to the City standard specifications for the materials, installation, testing, protective coatings, and other requirements.

Date:	By:	Rev:

S09B.DWG

STORM WATER
FIELD DROP INLET
FUTURE STREET AREAS

CITY OF LIVERMORE
STANDARD DETAIL

Dwn: FY	Date: May–13	No.
Ckd: Spec. Committee	Scale: None	S–9B

City Engineer

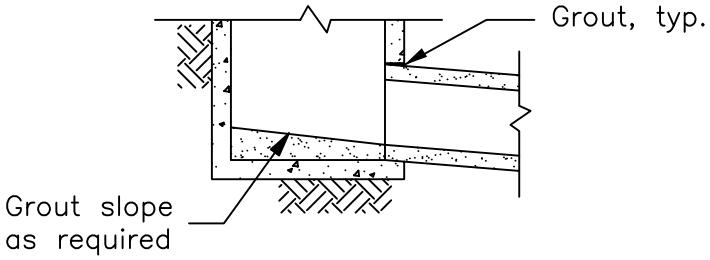

PRE–CAST CONCRETE

Notes:

1. Reinforcing bar per S–7 of S–8.
2. Frames and grates to be standard duty, except frame and grate in vehicle access areas to be heavy duty, HS–20 traffic loading. All frames and grates shall be boltable.
3. For WARNING SIGN installation see S–7C.

For construction in Unimproved or Landscaped Areas:

4. For C–I–P inlet base construction see:
   S–7 for Type I MH, 12" to 30" dia. pipes, or
   S–8 for Type II MH, 33" to 60" dia. pipes,
   with the following exceptions:
   1: ID = 2'–0" x 3'–0", and
   2: construction joints and weepholes are not required.
5. Pre–cast catch basin with bottom is allowed for 12" to 30" dia. pipes, less than 8'–0" deep in Unimproved or Landscape Areas.

For construction in Future Street Areas:

6. For C–I–P inlet base construction see:
   S–7 for Type I MH, 12" to 30" dia. pipes, or
   S–8 for Type II MH, 33" to 60" dia. pipes.
7. For modification of Field Drop Inlet to Curb Inlet remove concrete above weakened plane joint, tie–in rebar, construct new curb inlet per S–7.
8. Do not install weepholes in Field Drop Inlet in Future Street Area.
9. 9" from centerline of pipe to future face of curb.

User note:
These details shall be used in conjunction with all the City standard details and specifications. Refer to the City standard specifications for the materials, installation, testing, protective coatings, and other requirements.

Date:	By:	Rev:

STORM WATER
FIELD DROP INLET
NOTES

CITY OF LIVERMORE
STANDARD DETAIL

Dwn: M–W	Date: May–13	No.
Ckd: Spec. Committee	Scale: None	S–9C

City Engineer

S09C.DWG

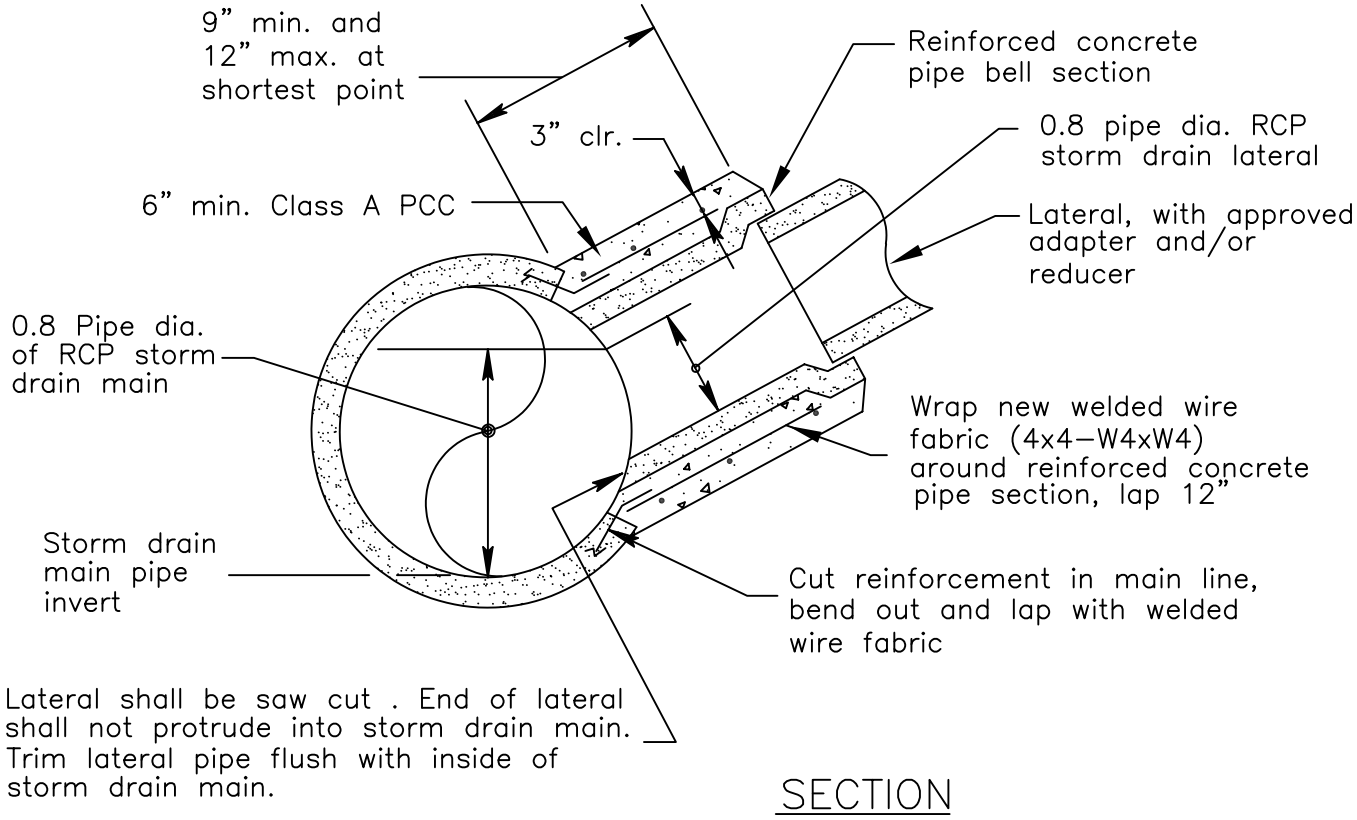

SECTION

Notes:

1. Maximum lateral size shall be 12".
2. Minimum existing reinforced concrete pipe storm drain main shall be 24".
3. Storm drain lateral connection to existing reinforced concrete pipe storm drain main subject to T.V. inspection by the City.
4. For storm lateral to maintenance hole, see S–2B.
5. Permitted for "on–site" lateral connections only.
6. Connection not allowed within 20' of maintenance hole or storm water inlet.
7. Minimum 12" clearance to adjacent storm drain joints.

User note:
These details shall be used in conjunction with all the City standard details and specifications. Refer to the City standard specifications for the materials, installation, testing, protective coatings, and other requirements.

Date:	By:	Rev:

S10.DWG

STORM DRAIN LATERAL CONNECTION TO EXISTING REINFORCED CONCRETE PIPE STORM DRAIN MAIN

CITY OF LIVERMORE
STANDARD DETAIL

Dwn: M–W	Date: May–13	No.
Ckd: Spec. Committee	Scale: None	S–10
City Engineer		

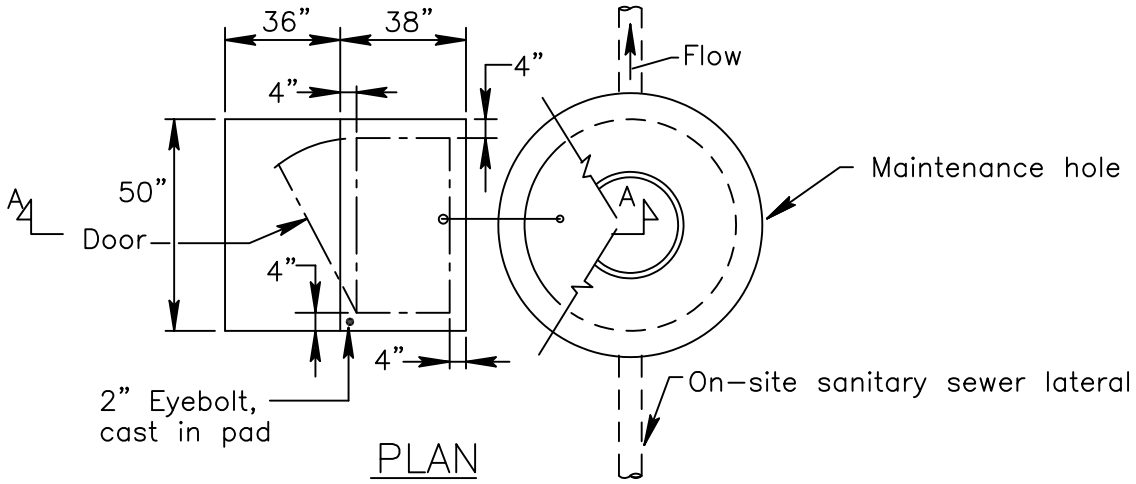

PLAN

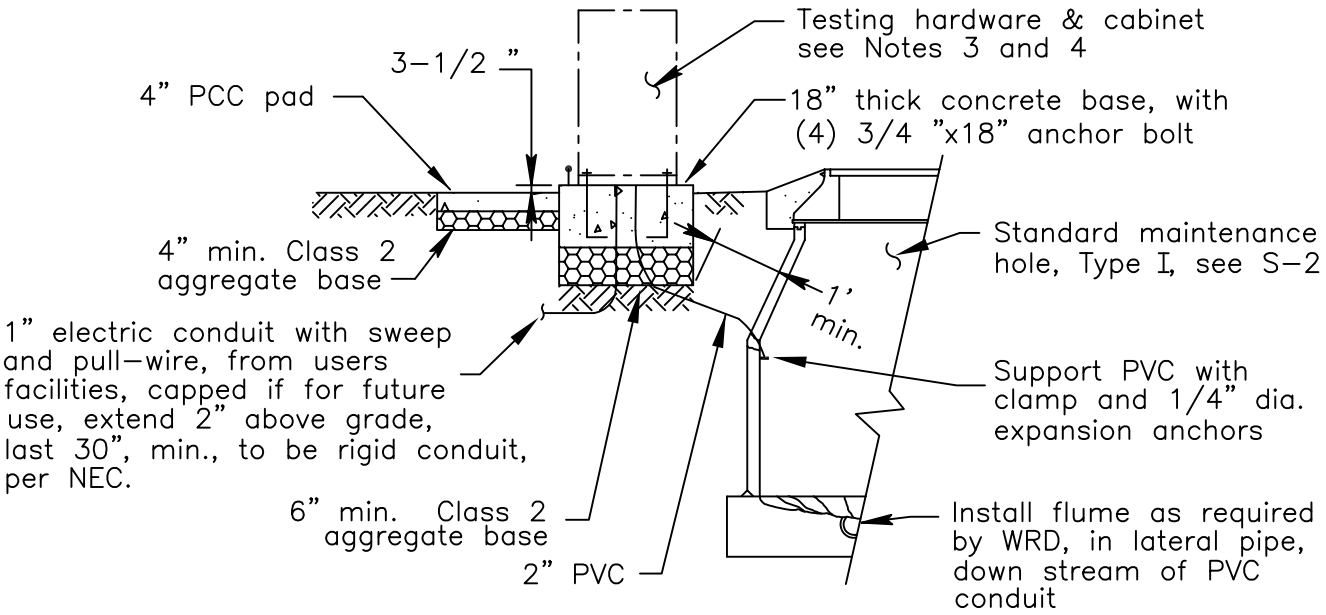

SECTION A-A

Notes:

1. Detail applies to all industrial users and large commercial users, as determined by the Water Resources Division.
2. Install sampling station at location approved by Water Resources Division.
3. Testing hardware and cabinet (CAL-TRANS Type P) to be installed only when required by Water Resources Division Discharge Permit.
4. Testing hardware to be approved by the Water Resources Division.

User note:

These details shall be used in conjunction with all the City standard details and specifications. Refer to the City standard specifications for the materials, installation, testing, protective coatings, and other requirements.

Date:	By:	Rev:	SEWAGE SAMPLING STATION	CITY OF LIVERMORE STANDARD DETAIL		
				Dwn: M-W	Date: May-13	No.
				Ckd: Spec. Committee	Scale: None	S-11
				City Engineer		

S11.DWG

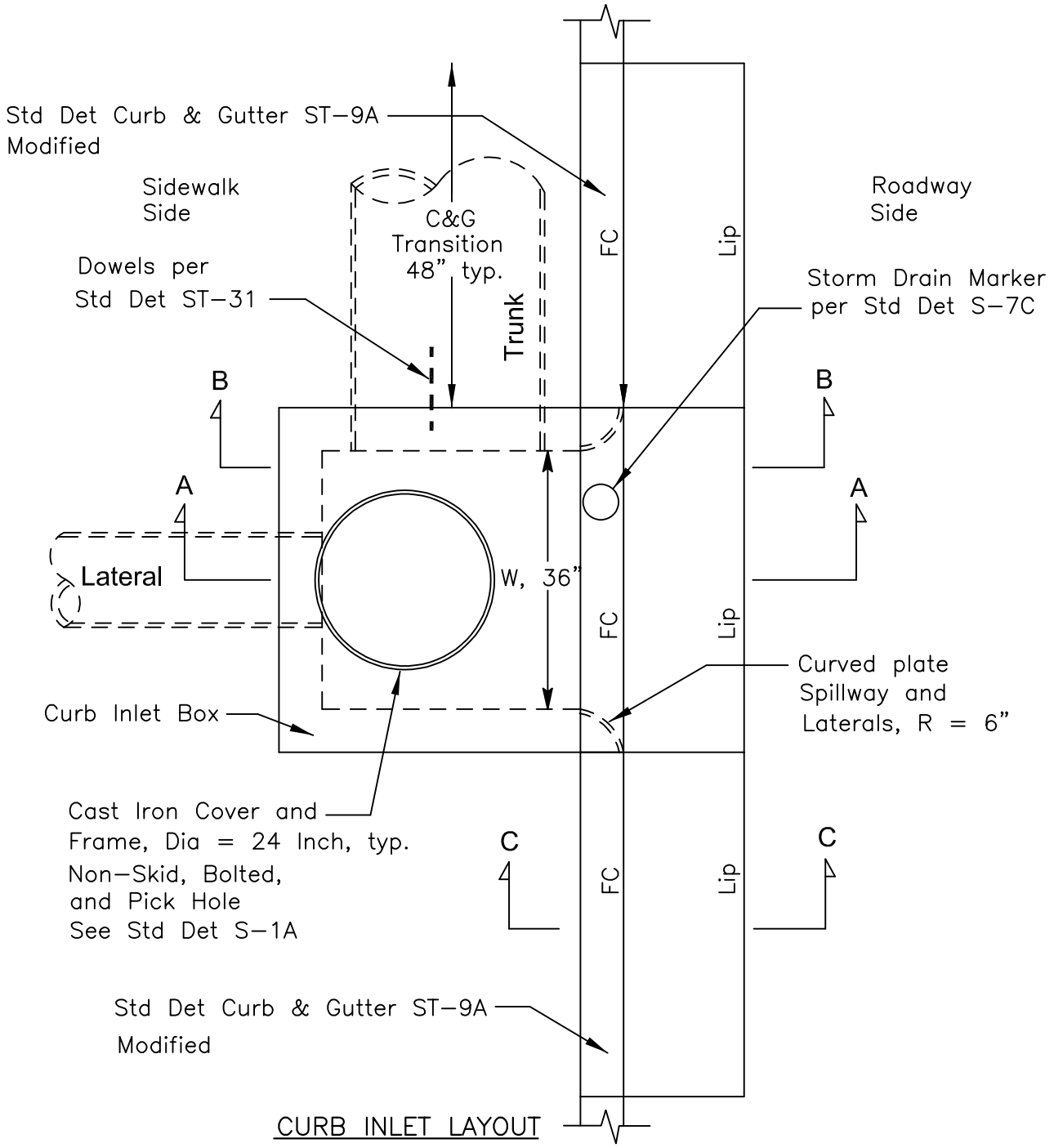

CURB INLET LAYOUT

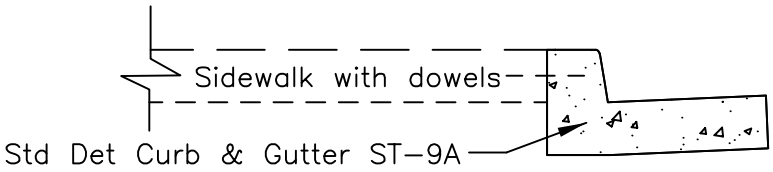

CURB INLET SECTION C–C

User note:
These details shall be used in conjunction with all the City standard details and specifications. Refer to the City standard specifications for the materials, installation, testing, protective coatings, and other requirements.

Date:	By:	Rev:

STORM WATER DROP INLET
PREFABRICATED INLET TOP
TYPE III
12" TO 36" DIA. PIPES

CITY OF LIVERMORE
STANDARD DETAIL

Dwn: HI	Date: May 23	No.
Ckd: Spec. Committee	Scale: None	S–12A

City Engineer

S–12a.DWG

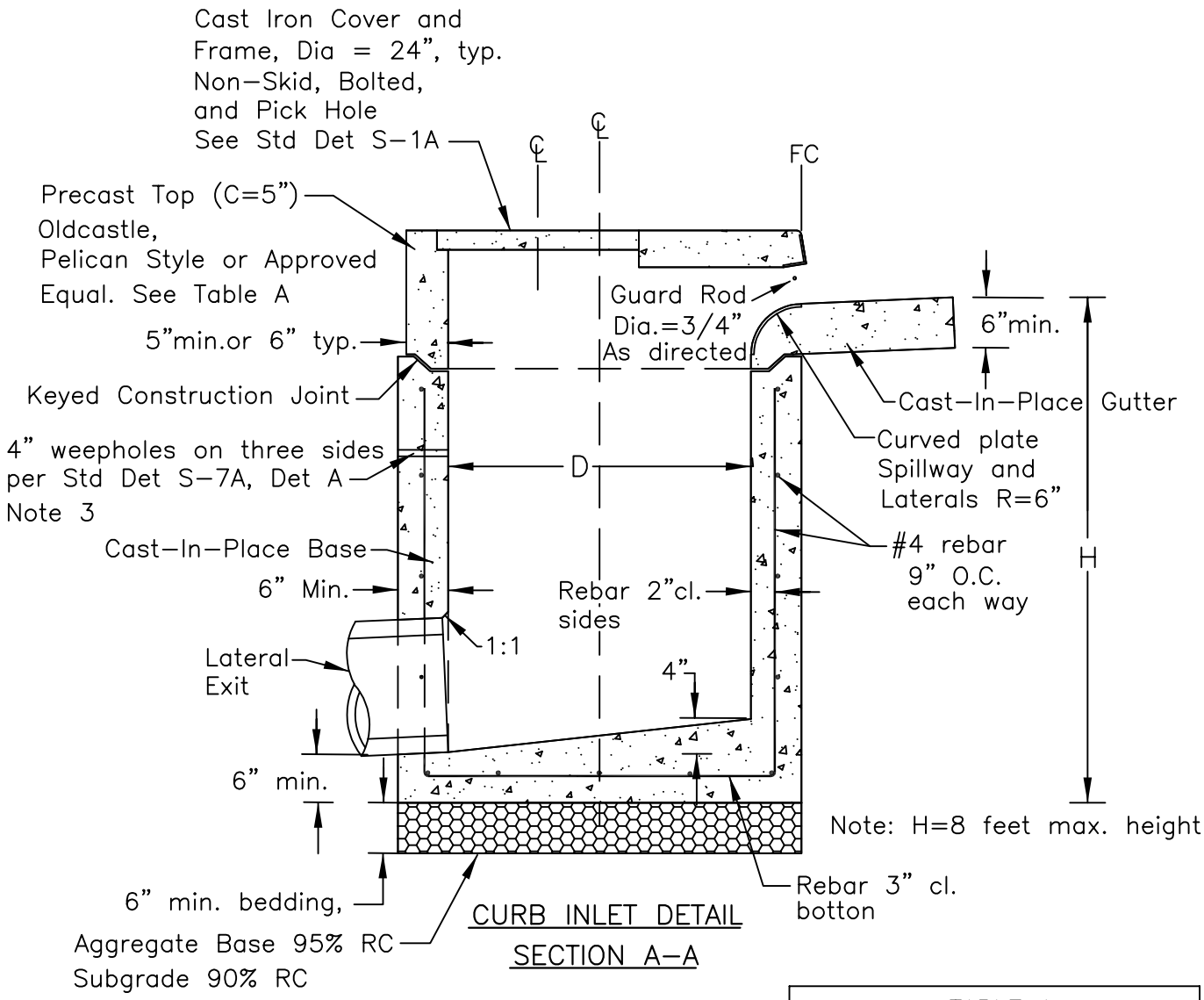

CURB INLET DETAIL

SECTION A-A

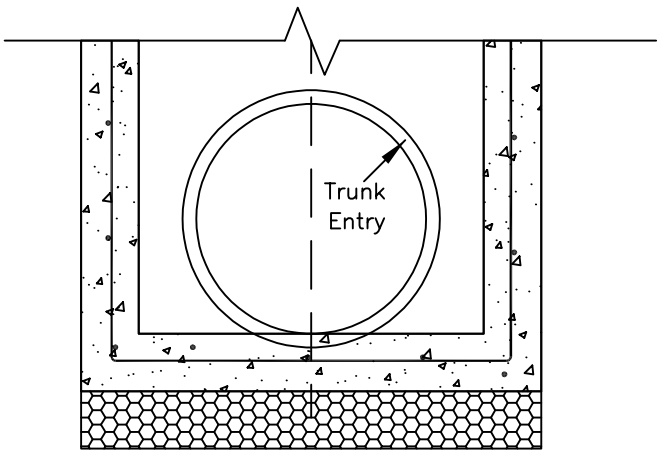

CURB INLET DETAIL

TABLE A			
Precast Inlet Top Model or Equal	Wide (W)	Depth (D)	Thick (C)
3AC	36"	36"	6"
4AC	48"	36"	5"

User note:

These details shall be used in conjunction with all the City standard details and specifications. Refer to the City standard specifications for the materials, installation, testing, protective coatings, and other requirements.

Date:	By:	Rev:

STORM WATER DROP INLET
PREFABRICATED INLET TOP
TYPE III
12" TO 36" DIA. PIPES

CITY OF LIVERMORE
STANDARD DETAIL

Dwn: HI	Date: May 23	No.
Ckd: Spec. Committee	Scale: None	S-12B

City Engineer

S-12b.DWG

CITY
OF
LIVERMORE

STANDARD DETAILS

TABLE OF CONTENTS

STREETS - ST

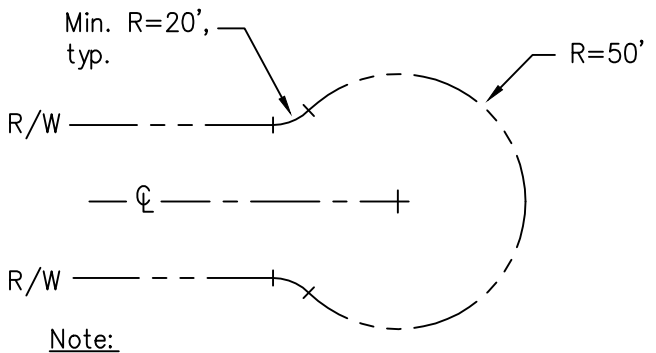

Note:

Cul-de-sac radius point may be offset from centerline.

CUL-DE-SAC

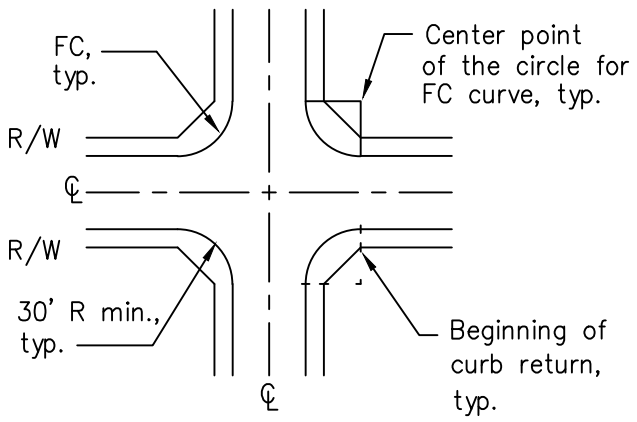

CURB RETURN

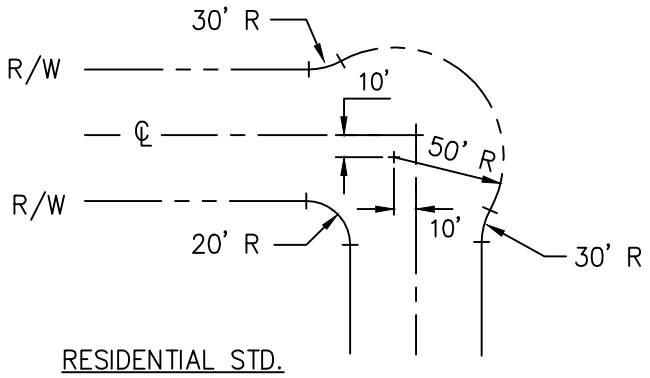

RESIDENTIAL STD.

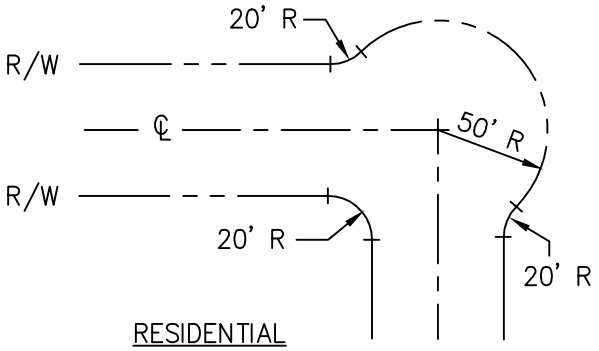

RESIDENTIAL
Alternate

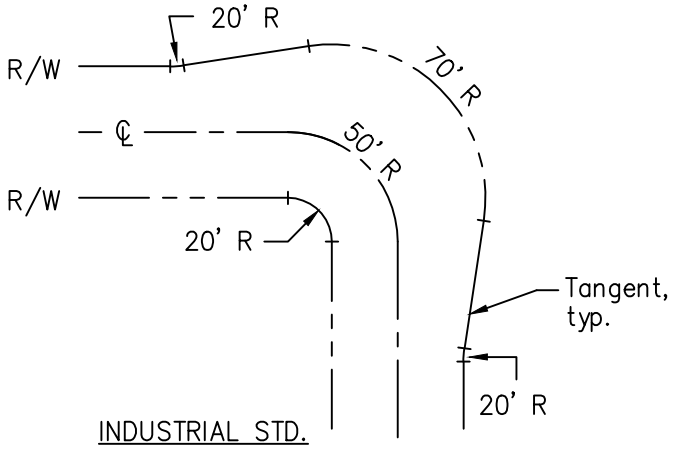

INDUSTRIAL STD.

ELBOWS

Notes:

1. Radii shown are minimums.
2. See ST-2A thru ST-2D for standard street widths.

User note:
These details shall be used in conjunction with all the City standard details and specifications. Refer to the City standard specifications for the materials, installation, testing, protective coatings, and other requirements.

Date	By	Rev.

CUL-DE-SAC, CURB RETURN, AND ELBOWS

CITY OF LIVERMORE
STANDARD DETAIL

Dwn: KY/KR	Date: May-13	NO.
Ckd: Spec. Committee	Scale: NONE	ST-1A
City Engineer		

ST01A.DWG

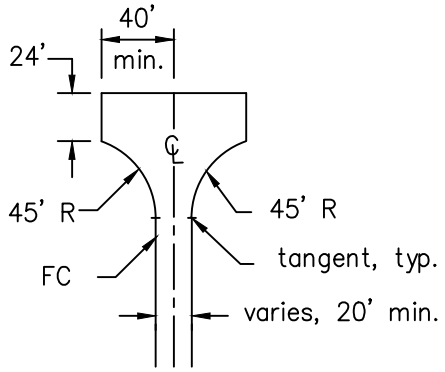

"T" HAMMERHEAD

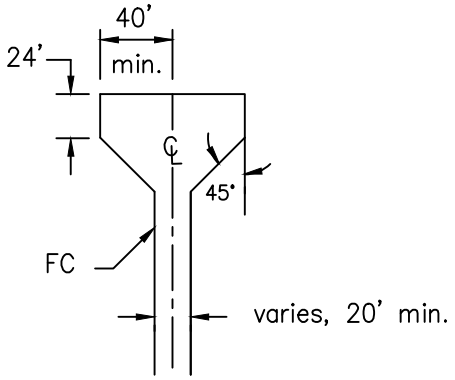

"T" HAMMERHEAD

(CHAMFER ALTERNATIVE)

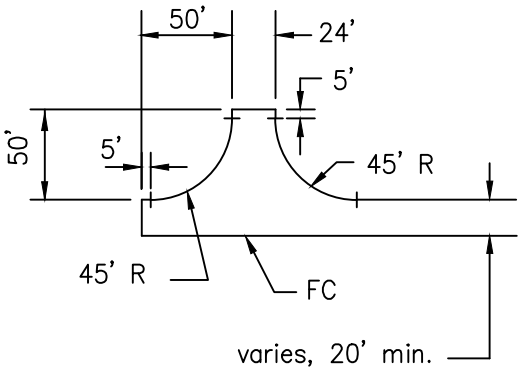

DOG LEG HAMMERHEAD

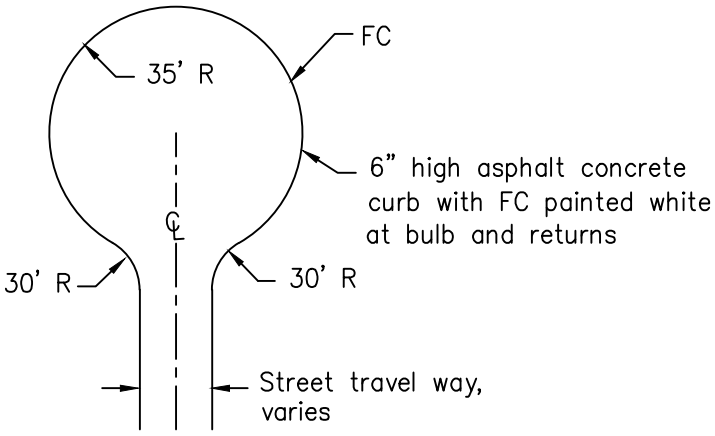

Cul-de-sac radius point may be offset from center

TEMPORARY TURNAROUND

Notes:

1. Radii shown are minimums.
2. See ST-2A thru ST-2D for standard street widths.
3. These hammerheads are not standard design practice to be used in lieu of cul-de-sac. Hammerheads are only used on case by case basis as approved by the City.

User note:
These details shall be used in conjunction with all the City standard details and specifications. Refer to the City standard specifications for the materials, installation, testing, protective coatings, and other requirements.

Date	By	Rev.

ST01B.DWG

HAMMERHEADS AND TEMPORARY TURNAROUND

CITY OF LIVERMORE
STANDARD DETAIL

Dwn: KY	Date: May-13	NO.
Ckd: Spec. Committee	Scale: NONE	ST-1B
City Engineer		

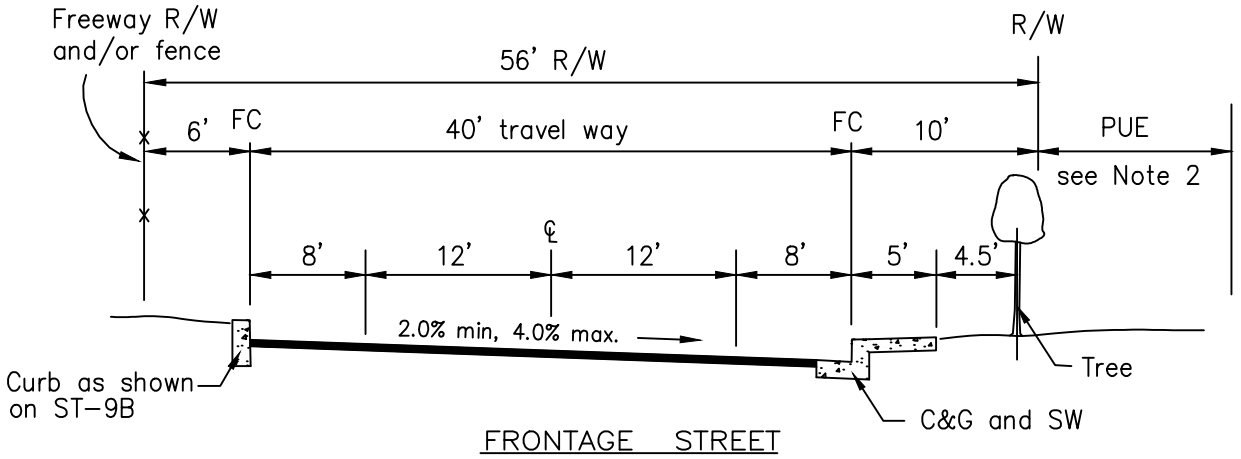

FRONTAGE STREET

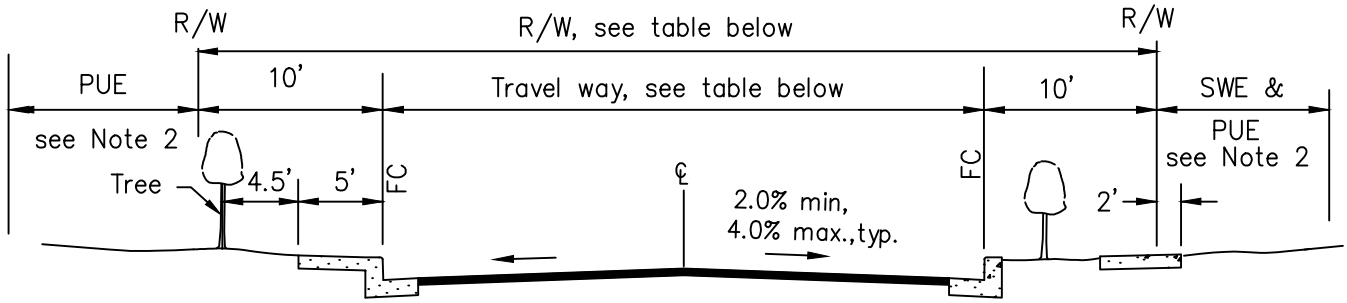

MONOLITHIC SIDEWALK
See ST-3

SEPARATED SIDEWALK
See ST-4

Street type	*Travel way	* R/W	South Livermore Area Transition Area Only **Travel way	** R/W	Guideline Criteria
Local street	40'	60'	32'	52'	Planned to serve more than 50 units, each direction
Local street, with parking on one side	32'	52'	25'	45'	No homes fronting on one side of the street
Local street, with no parking	26'	27'	–	–	Planned to serve less than 20 units ***
Minor Local street, Cul-De-Sac, and Loops	36'	56'	32'	52'	Planned to serve 20 to 50 units, each direction
Short Cul-De-Sac	32'	52'	32'	52'	Planned to serve less than 20 units

* The approved tentative map will determine actual street widths. This table is intended to be a guideline only.

** R/W and Travel way dimensions is reduced for developments in the specific plan area.

*** Street to have monolithic sidewalk on both sides of street within 6' wide sidewalk/public utility easements adjacent to right-of-way

LOCAL STREET AND CUL-DE-SAC

See ST-2E for notes

User note:
These details shall be used in conjunction with all the City standard details and specifications. Refer to the City standard specifications for the materials, installation, testing, protective coatings, and other requirements.

Date	By	Rev.

STREET WIDTHS

(FRONTAGE, LOCAL & CUL-DE-SAC)

CITY OF LIVERMORE
STANDARD DETAIL

Dwn: FY | Date: May-13 | NO.
Ckd: Spec. Committee | Scale: NONE | ST-2A

City Engineer

ST02A.DWG

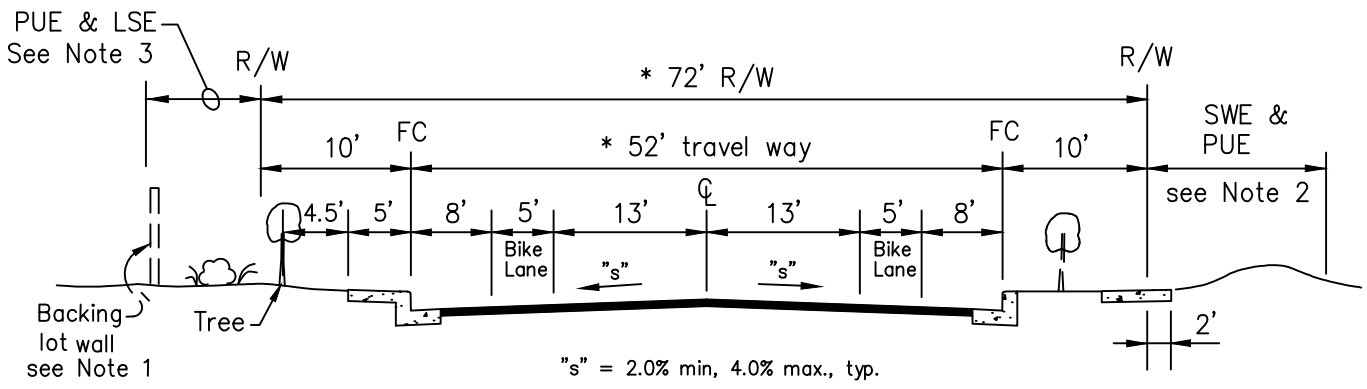

MONOLITHIC SIDEWALK
See ST-3

COLLECTOR STREET (RESIDENTIAL)

SEPARATED SIDEWALK
See ST-4

* For collector streets with parking on one side of the street, street width may be reduce to 66' R/W and 46' travel way.

Minimum street width	
Private street with parallel parking on both sides	36'
Private street with parallel parking on one side	33'
Private street (No parking on either side)	24'
Private alley (No parking on either side)	20'

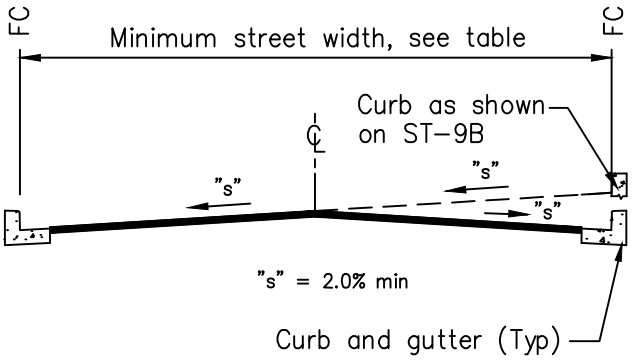

PRIVATE RESIDENTIAL STREET AND PRIVATE RESIDENTIAL TOWNHOUSE/CONDOMINIUM STREET

See ST-2E for notes

User note:
These details shall be used in conjunction with all the City standard details and specifications. Refer to the City standard specifications for the materials, installation, testing, protective coatings, and other requirements.

Date	By	Rev.

STREET WIDTHS

(COLLECTOR AND PRIVATE STREETS)

CITY OF LIVERMORE
STANDARD DETAIL

Dwn: FY	Date: May-13	NO.
Ckd: Spec. Committee	Scale: NONE	ST-2B
City Engineer		

ST02B.DWG

ST02C–R1.DWG

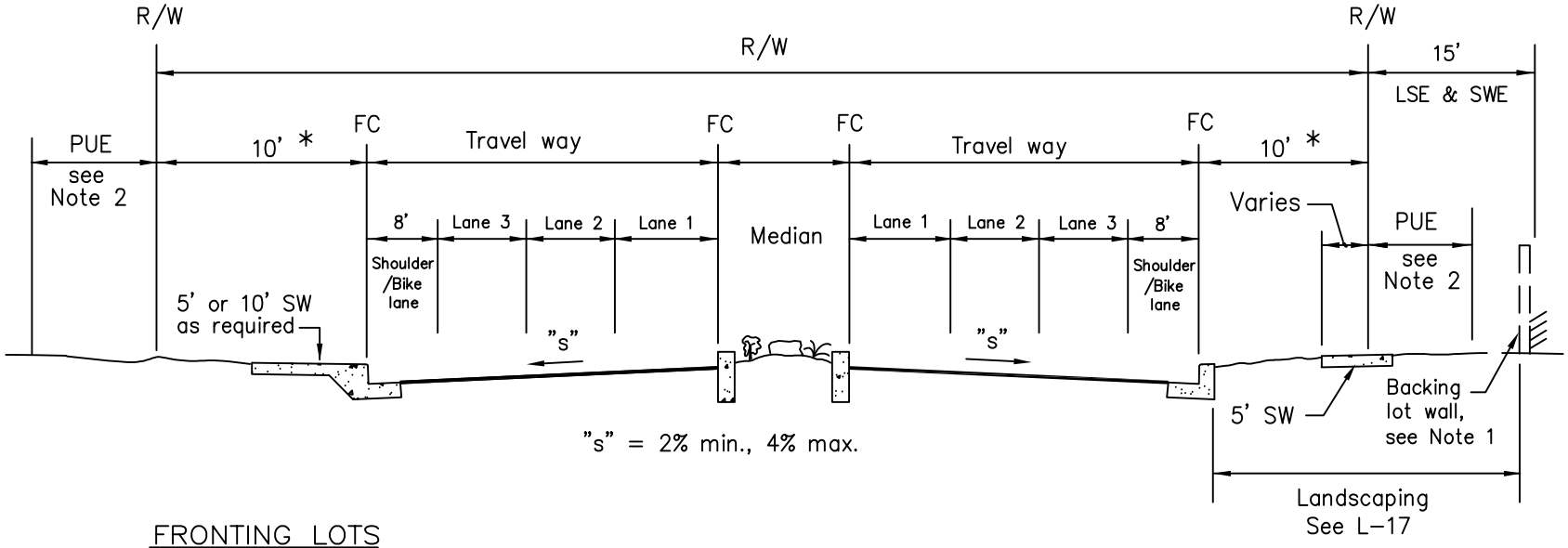

FRONTING LOTS

MONOLITHIC SIDEWALK

(INDUSTRIAL OR COMMERCIAL ONLY)

BACKING LOTS

SEPARATED, MONOLITHIC OR MEANDERING SIDEWALK AS REQUIRED

MAJOR STREET

Total Travel Lanes	* * R/W	Travel way					Median	
		Shoulder/ Bike Lane width	Lane 1 width	Lane 2 width	Lane 3 width	Total	Single Left Turn	Dual Left Turn
4	104'	8'–10'	12'–14'	12'	–	34'	16'	–
4	116'	8'–10'	12'–14'	12'	–	34'	–	28'
6	128'	8'–10'	12'–14'	12'	12'	46'	16'	–
6	140'	8'–10'	12'–14'	12'	12'	46'	–	28'

* Dimension is one (1) foot on Business and Commercial Park (BCP) frontages

** Right of way (R/W) dimensions reduced in Business and Commercial Park (BCP) per Policy Proposal No. 160–98.

See ST–2E for notes.

User note:
These details shall be used in conjunction with all the City standard details and specifications. Refer to the City standard specifications for the materials, installation, testing, protective coatings, and other requirements.

Rev.	By	Date

STREET WIDTHS (MAJOR STREETS)

CITY OF LIVERMORE

STANDARD DETAIL

Dwn: KY,HI | Date: Oct–22

Ckd: Spec. Committee | Scale: NONE

City Engineer

NO. ST–2C

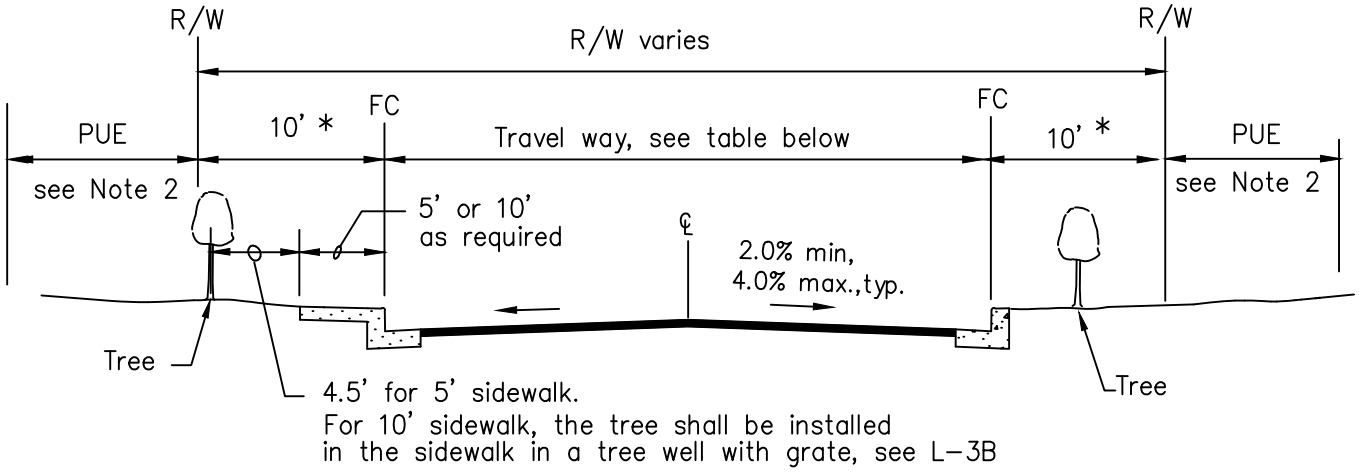

MONOLITHIC SIDEWALK

(ONE SIDE ONLY)

See ST-3

Street type	Travel way	R/W	Remarks
Industrial/ Commercial	40' min.	60' min.	1. Two lane street, with no left turn lane.
	52' min.	72' min.	1. Two lane street. with left turn lane.

INDUSTRIAL/COMMERCIAL STREET

* Dimension is one (1) foot in Business and Commercial Park (BCP) per Policy Proposal No. 160-98.

See ST-2E for notes

User note:
These details shall be used in conjunction with all the City standard details and specifications. Refer to the City standard specifications for the materials, installation, testing, protective coatings, and other requirements.

Date	By	Rev.

STREET WIDTHS

(INDUSTRIAL/COMMERCIAL)

CITY OF LIVERMORE
STANDARD DETAIL

Dwn: KY	Date: May-13	NO.
Ckd: Spec. Committee	Scale: NONE	ST-2D

City Engineer

ST02D-R1.DWG

ST02E.DWG

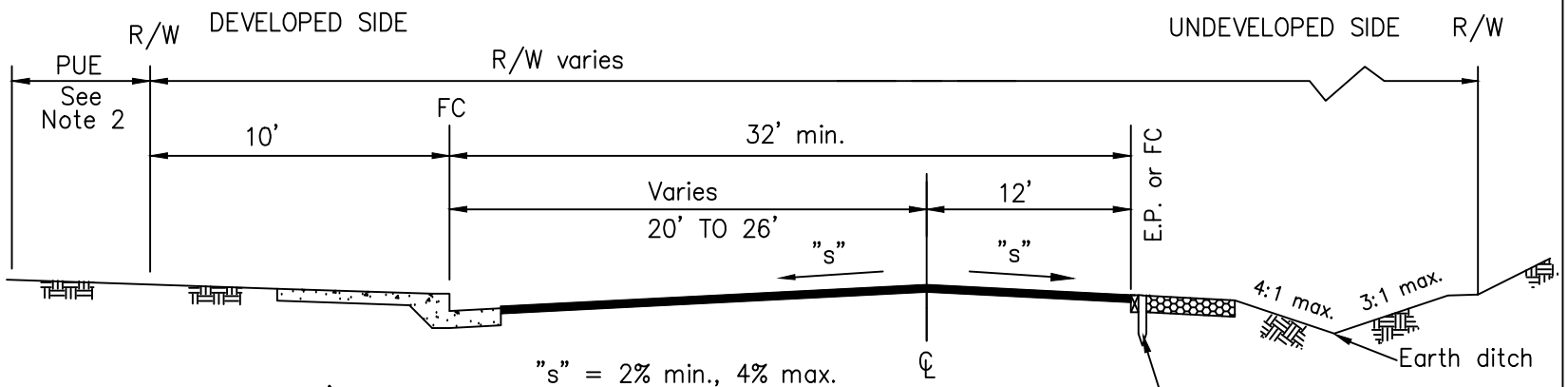

PARTIAL STREET SECTION

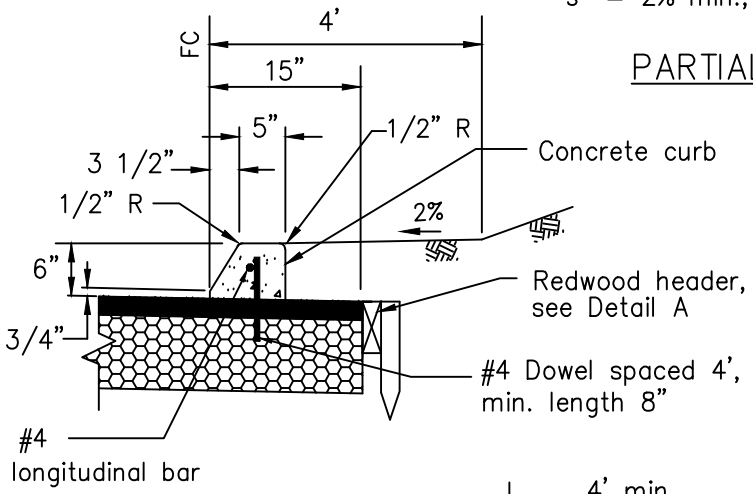

DETAIL "B"

6" CONCRETE CURB

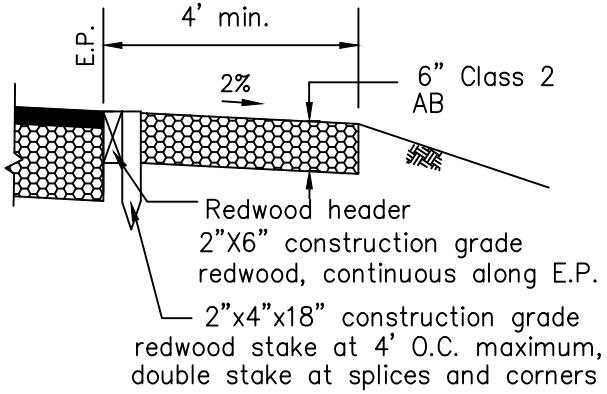

DETAIL "A"

REDWOOD HEADER

NOTES:

1. Where backing lots are authorized, install backing lot wall per L-17.
2. PUE shall be 6' minimum, 10' maximum unless otherwise noted. For Business and Commercial Park frontages where R/W line is one foot behind face of curb a minimum 15 feet wide joint Sidewalk utility easement is required.
3. For backing lot treatment, landscape easement and PUE shall be 3'. For no backing lot treatment, PUE shall be 6'.
4. See ST-3, 4 & 5 for sidewalks.
5. See ST-9A for curb and gutter.
6. See ST-4, 6, 7, & 8 for driveways.
7. See ST-12 for utility locations.
8. See ST-11 for traffic index, and street section requirements.
9. Redwood Header for temporary application, concrete flush curb required for permanent application.

User note:
These details shall be used in conjunction with all the City standard details and specifications. Refer to the City standard specifications for the materials, installation, testing, protective coatings, and other requirements.

Rev.	By	Date

STREET WIDTH

(PARTIAL STREET SECTION FOR TEMP 40' TO 52' TRAVEL WAY STREETS)

CITY OF LIVERMORE

STANDARD DETAIL

Dwn: FY | Date: May-13

Ckd: Spec. Committee | Scale: NONE

City Engineer

NO. ST-2E

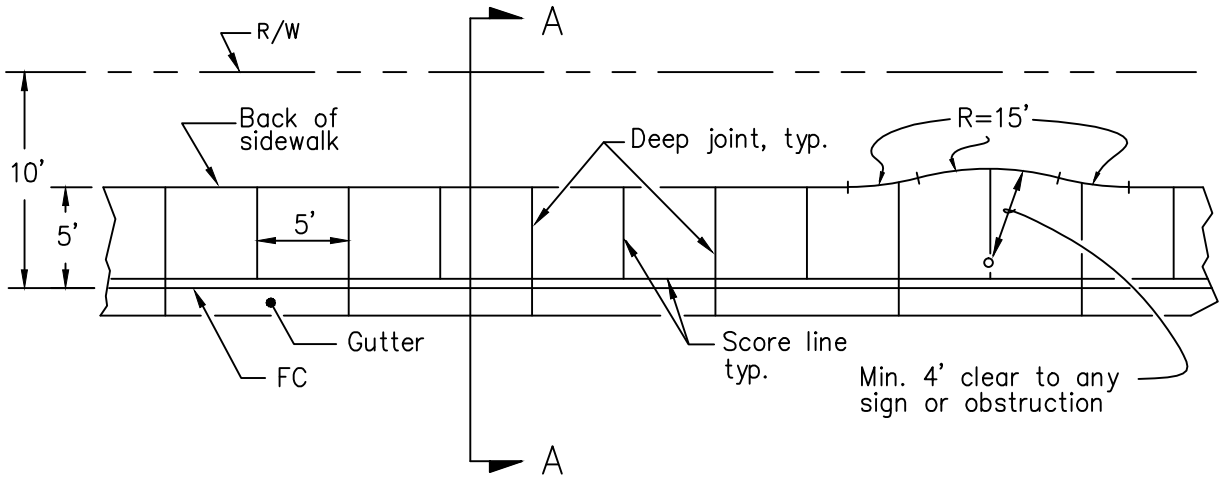

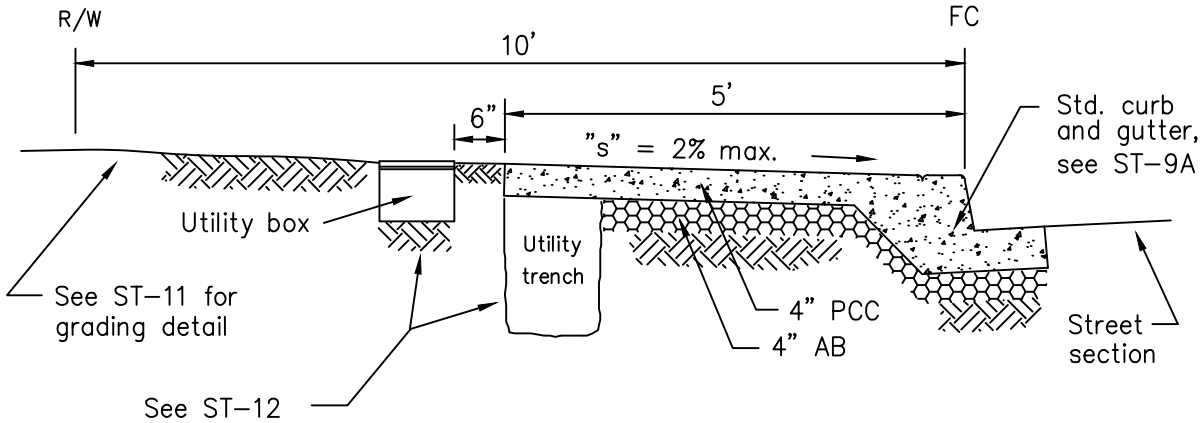

SECTION A–A

User note:
These details shall be used in conjunction with all the City standard details and specifications. Refer to the City standard specifications for the materials, installation, testing, protective coatings, and other requirements.

Date	By	Rev.

MONOLITHIC SIDEWALK (RESIDENTIAL/INDUSTRIAL)

CITY OF LIVERMORE
STANDARD DETAIL

Dwn: KY/KR	Date: May–13	NO.
Ckd: Spec. Committee	Scale: NONE	ST-3

City Engineer

ST03.DWG

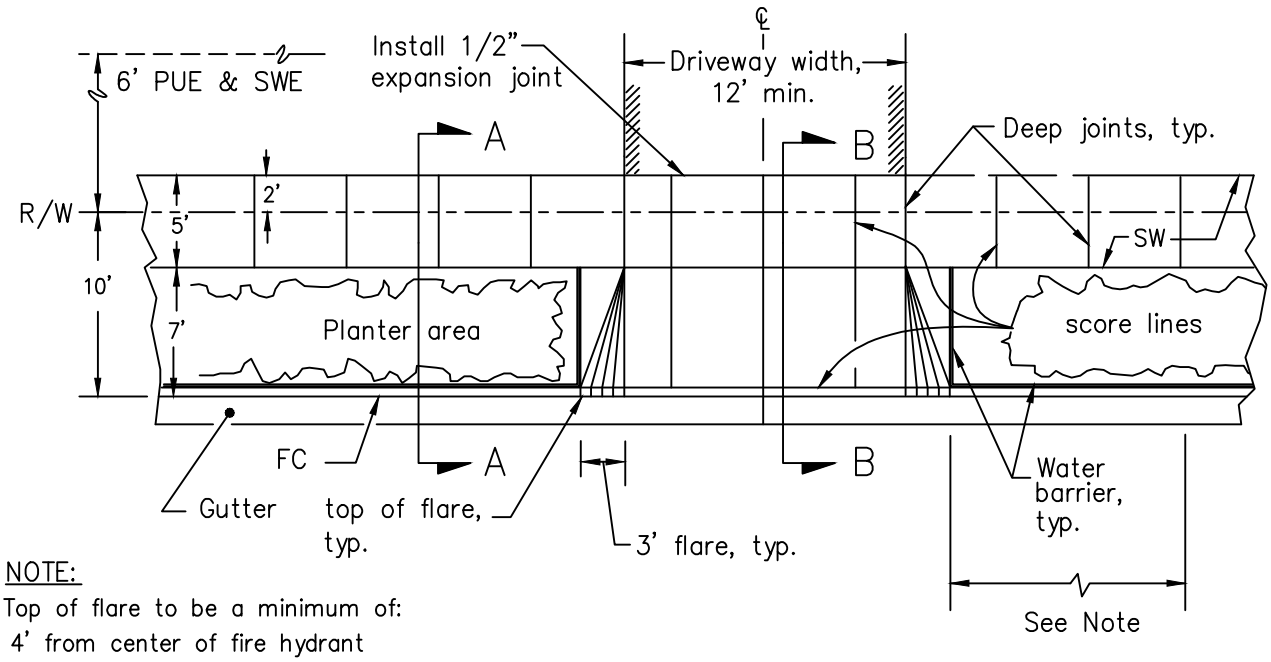

NOTE:

Top of flare to be a minimum of:

4' from center of fire hydrant
4' from center of street light
4' from property line
10' from beginning of curb return
8' from center of street tree
4' from top of flare of other driveway

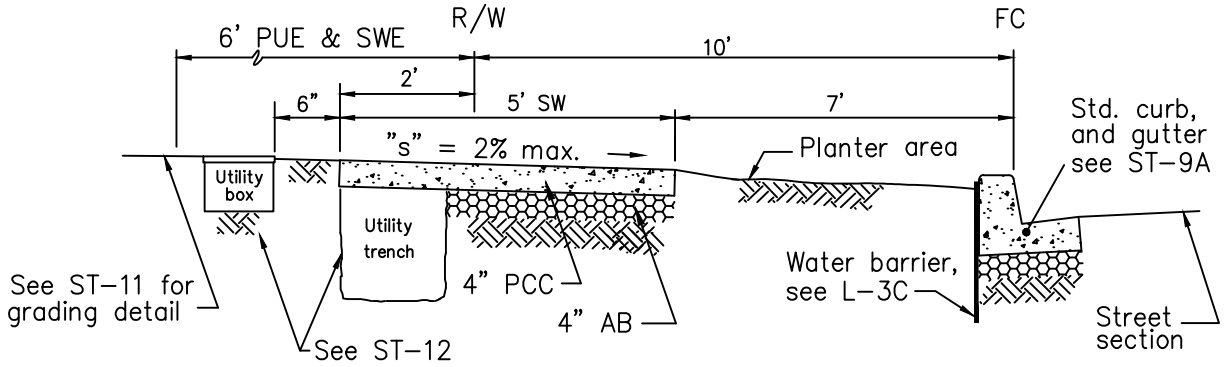

SECTION A-A

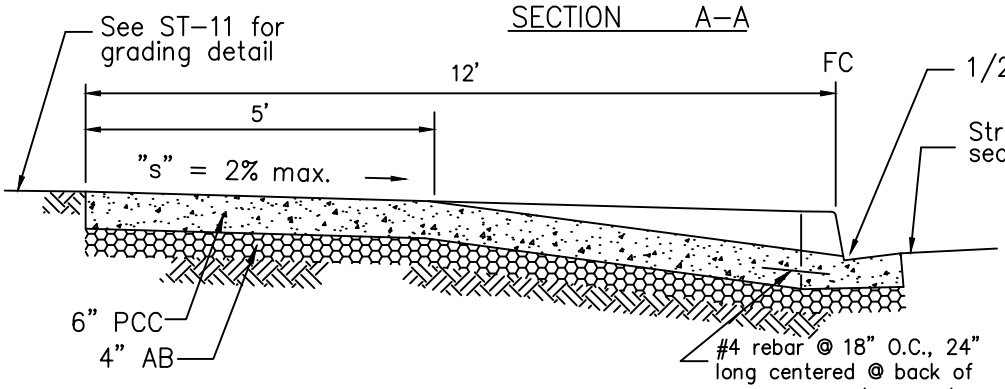

SECTION B-B

User note:
These details shall be used in conjunction with all the City standard details and specifications. Refer to the City standard specifications for the materials, installation, testing, protective coatings, and other requirements.

Date	By	Rev.

SEPARATED SIDEWALK AND DRIVEWAY (RESIDENTIAL)

CITY OF LIVERMORE
STANDARD DETAIL

Dwn: FY	Date: May-13	NO.
Ckd: Spec. Committee	Scale: NONE	ST-4

City Engineer

ST04.DWG

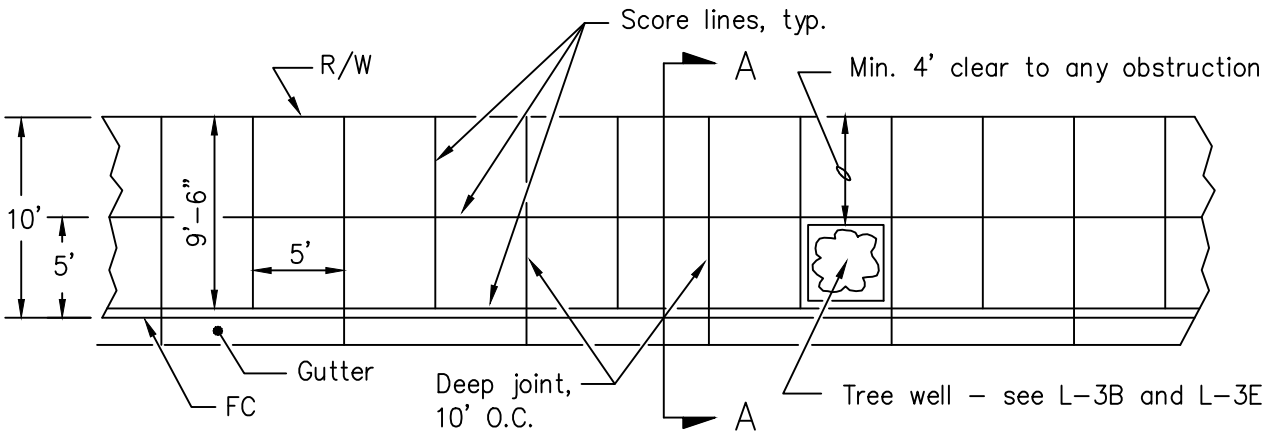

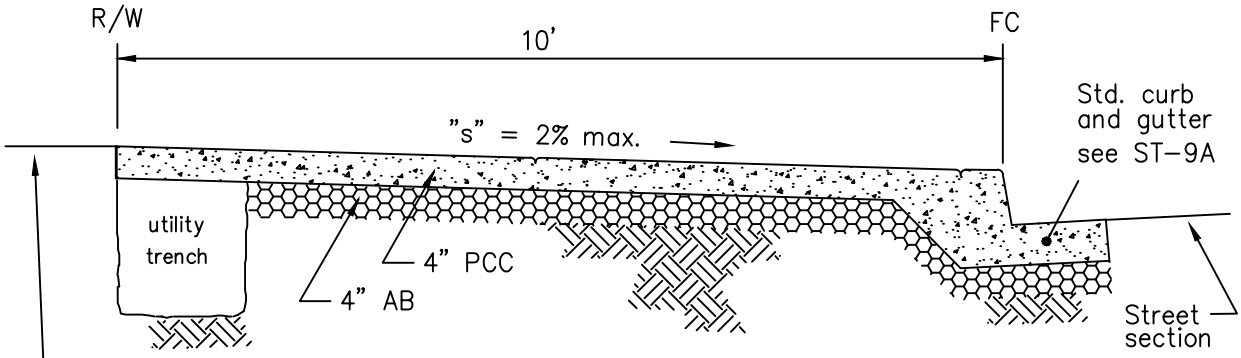

Utility boxes to be placed in PUE behind sidewalk where applicable, see ST-12 for placement of utility trench and boxes.

SECTION A–A

User note:
These details shall be used in conjunction with all the City standard details and specifications. Refer to the City standard specifications for the materials, installation, testing, protective coatings, and other requirements.

Date	By	Rev.

SIDEWALK

(COMMERCIAL/INDUSTRIAL)

CITY OF LIVERMORE
STANDARD DETAIL

Dwn: KR/KY	Date: May–13	NO.
Ckd: Spec. Committee	Scale: NONE	ST-5

City Engineer

ST05.DWG

ST06.DWG

Rev.	By	Date

DRIVEWAY (STREET–LEVEL) (INDUSTRIAL/COMMERCIAL)

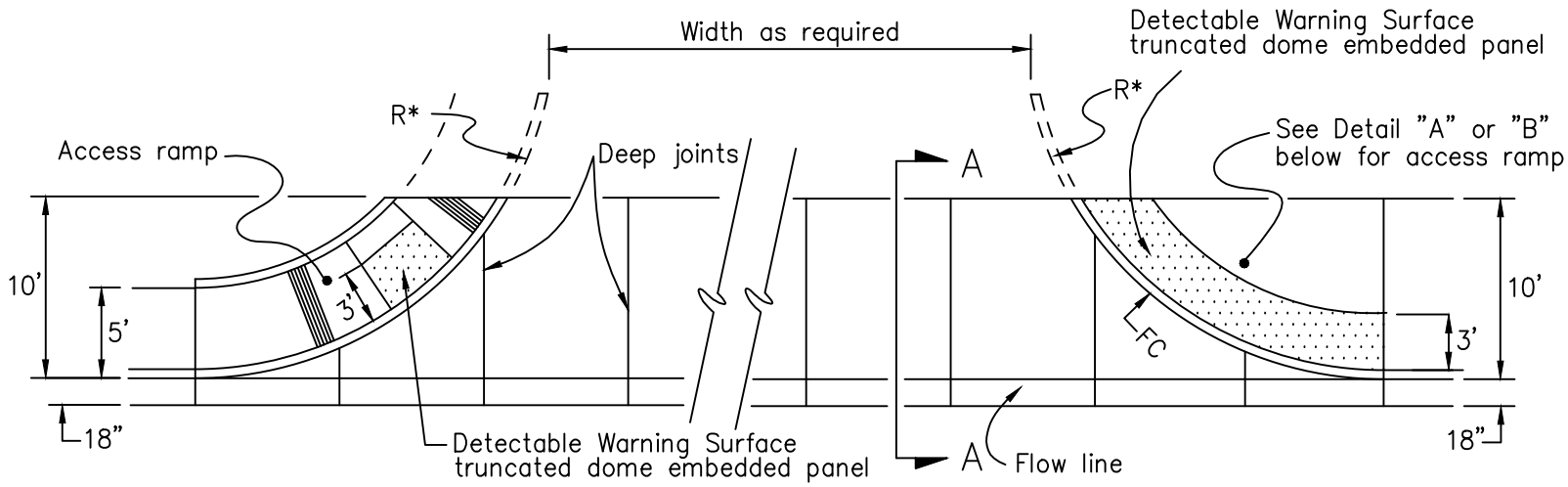

5' SIDEWALK

10' SIDEWALK

* R=20' min., 30' max.

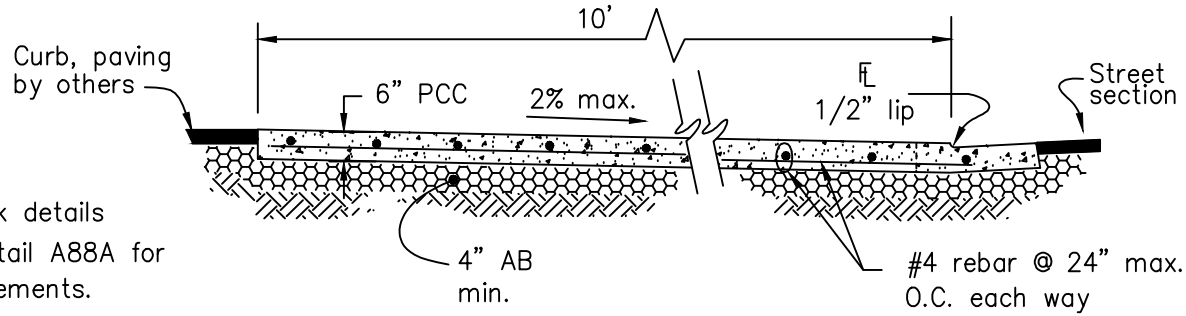

SECTION A–A

Notes:

1. See ST–3, ST–5 for sidewalk details
2. See Caltrans Curb Ramp Detail A88A for additional details and requirements.

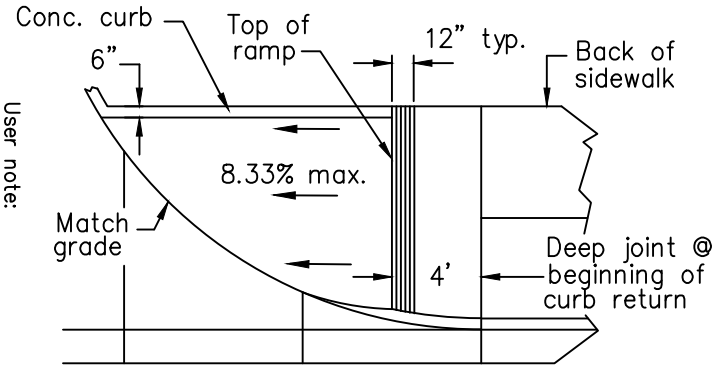

DETAIL "B" – ACCESS RAMP

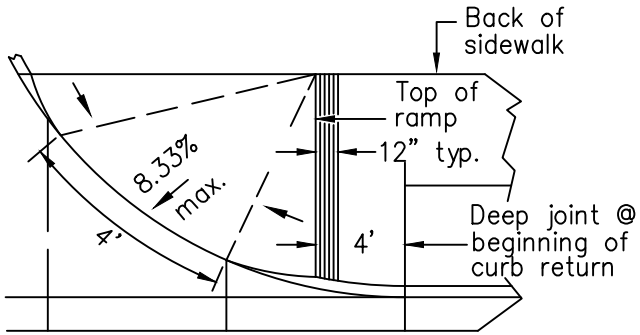

DETAIL "A" – ACCESS RAMP

User note:
These details shall be used in conjunction with all the City standard details and specifications. Refer to the City standard specifications for the materials, installation, testing, protective coatings, and other requirements.

CITY OF LIVERMORE
STANDARD DETAIL

Dwn: FY | Date: May–13 | NO.
Ckd: Spec. Committee | Scale: NONE | ST–6

City Engineer

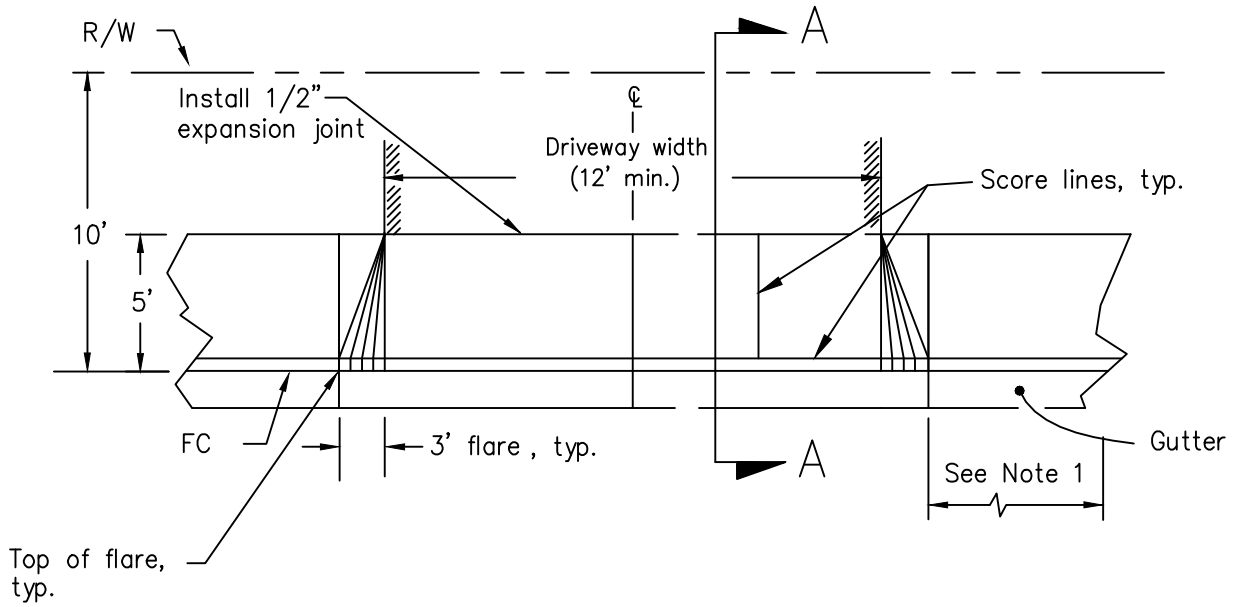

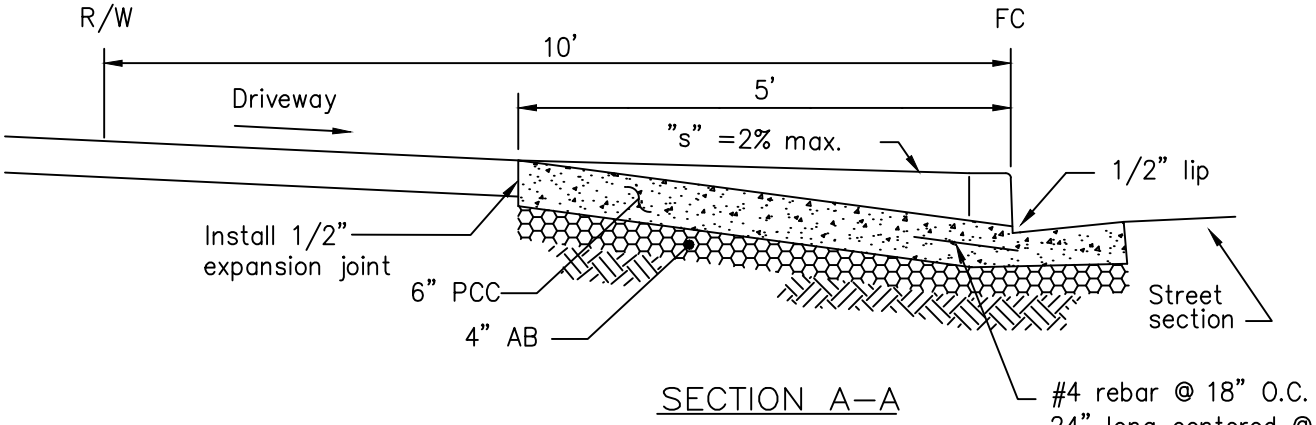

SECTION A–A

NOTES:

1. Top of flare to be a minimum of:
   - 4' from center of fire hydrant
   - 4' from center of street light
   - 4' from property line
   - 10' from beginning of curb return
   - 8' from center of street tree
   - 4' from top of flare of other driveway
2. See ST–3 for sidewalk.
3. The driveway shall be symmetric about the centerline.

User note:
These details shall be used in conjunction with all the City standard details and specifications. Refer to the City standard specifications for the materials, installation, testing, protective coatings, and other requirements.

Date	By	Rev.

DRIVEWAY EXISTING DEVELOPMENT (RESIDENTIAL)

CITY OF LIVERMORE
STANDARD DETAIL

Dwn: FY	Date: May–13	NO.
Ckd: Spec. Committee	Scale: NONE	ST–7A

City Engineer

ST07A.DWG

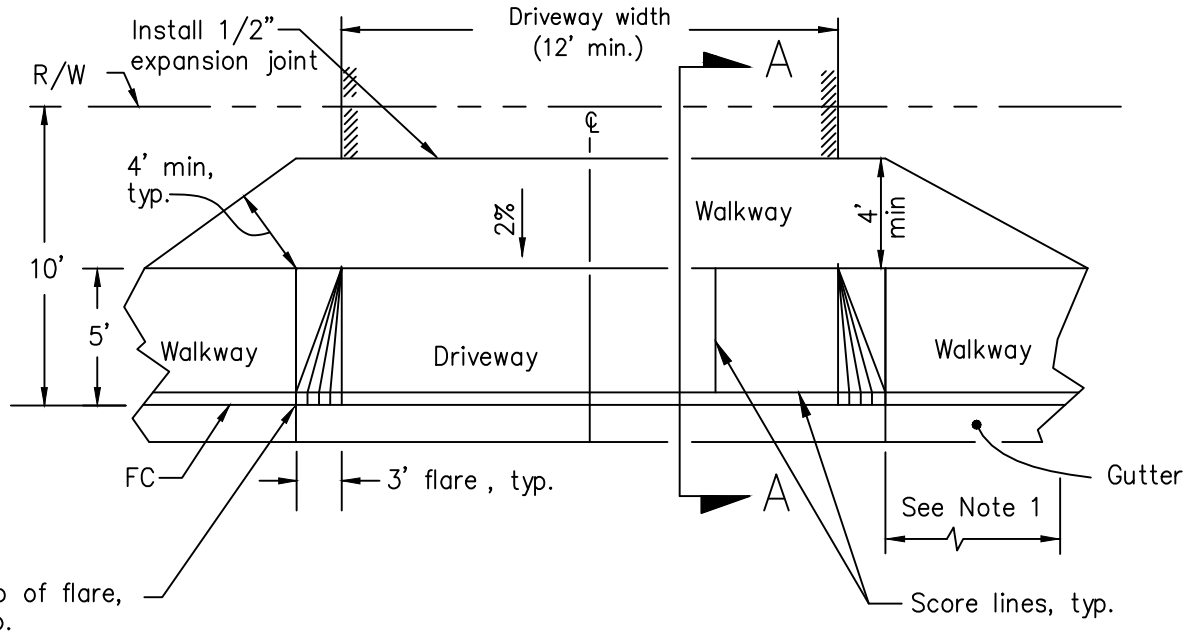

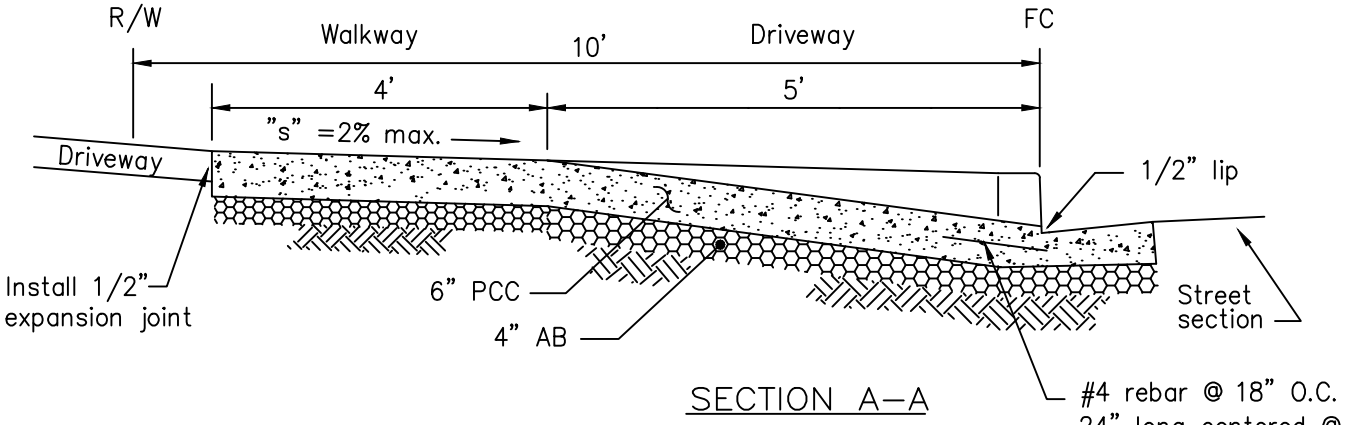

SECTION A–A

NOTES:

1. Top of flare to be a minimum of:
   - 4' from center of fire hydrant
   - 4' from center of street light
   - 4' from property line
   - 10' from beginning of curb return
   - 8' from center of street tree
   - 4' from top of flare of other driveway
2. See ST–3 for sidewalk.
3. The driveway shall be symmetric about the centerline.

User note:
These details shall be used in conjunction with all the City standard details and specifications. Refer to the City standard specifications for the materials, installation, testing, protective coatings, and other requirements.

Date	By	Rev.

DRIVEWAY – NEW DEVELOPMENT (RESIDENTIAL)

CITY OF LIVERMORE
STANDARD DETAIL

Dwn: FY	Date: May–13	NO.
Ckd: Spec. Committee	Scale: NONE	ST–7B

City Engineer

ST07B.DWG

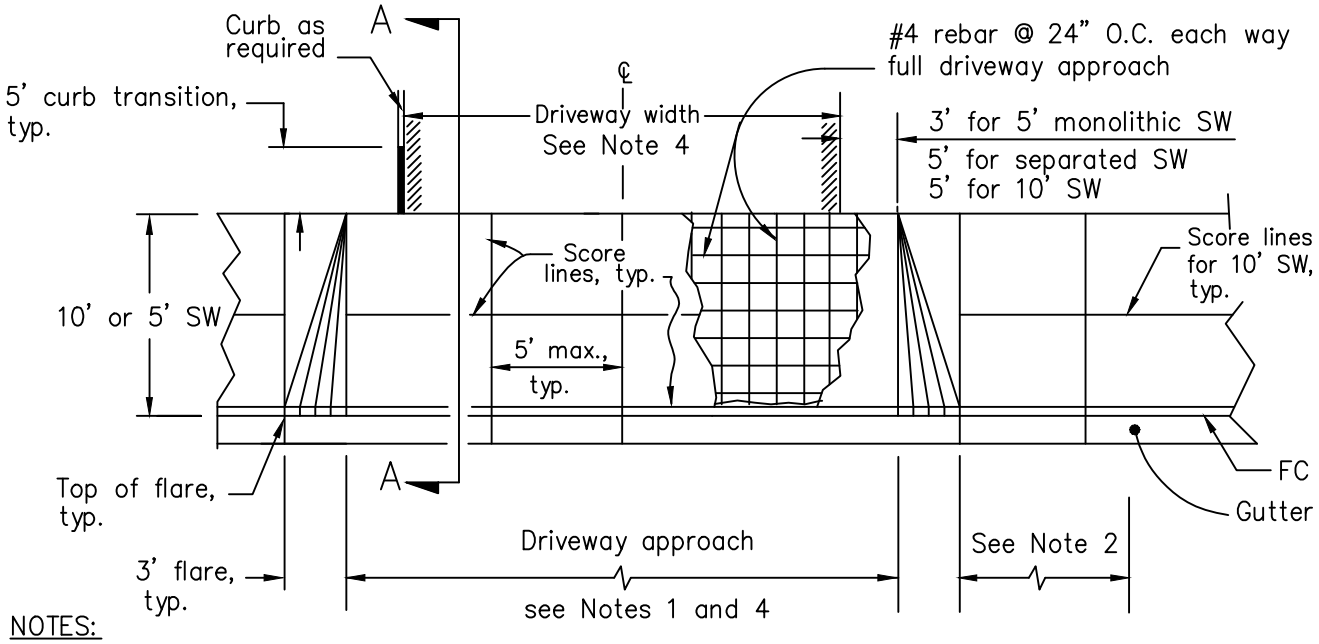

NOTES:

1. Driveway approach to be 10' min. wider than the driveway width for 10' monolithic SW or 5' separated SW and 6' min. wider than the driveway width for 5' SW.
2. Top of flare to be a minimum of:
   - 10' from center of fire hydrant
   - 4' from center of street light
   - 4' from property line
   - 10' from beginning of curb return
   - 8' from center of street tree
   - 4' from top of flare of other driveway
3. See ST-3 & ST-5 for sidewalk.
4. Driveway width:

Commercial	Industrial
20' min. one-way traffic	20' min. one-way traffic
24' min. two-way traffic	30' min. two-way traffic
40' max.	40' max.

*For 10' driveways provide a 5' max walkway at 2% slope across back of driveway approach. For 5' driveways, see detail ST-7B for walkway behind driveway approach.

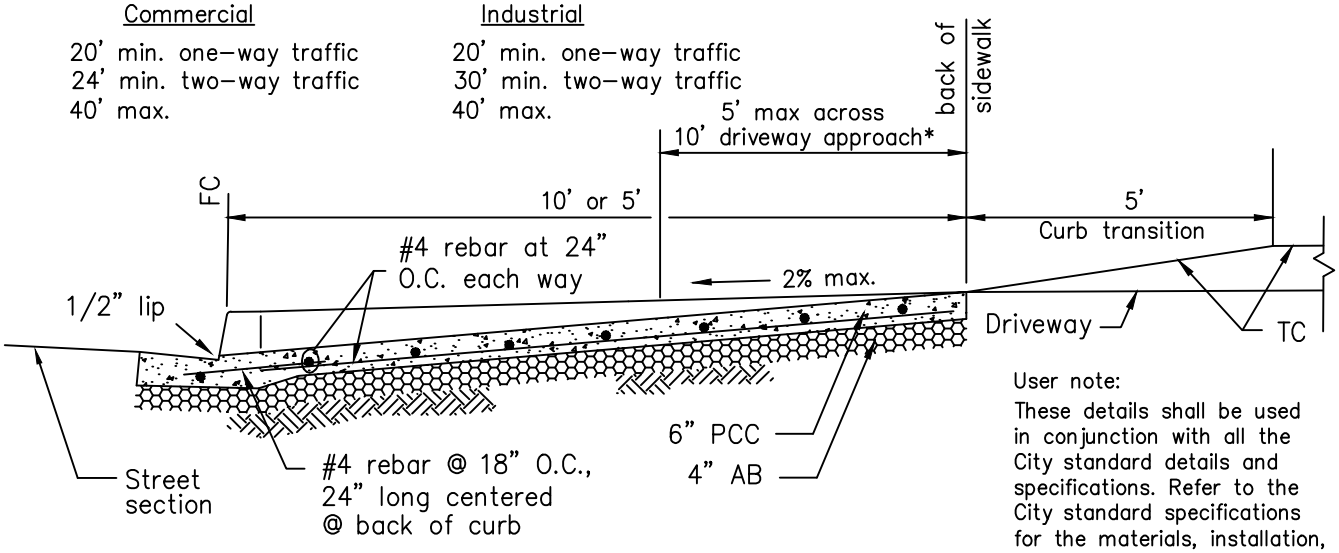

SECTION A-A

User note:
These details shall be used in conjunction with all the City standard details and specifications. Refer to the City standard specifications for the materials, installation, testing, protective coatings, and other requirements.

Date	By	Rev.

DRIVEWAY

(COMMERCIAL/INDUSTRIAL)

CITY OF LIVERMORE
STANDARD DETAIL

Dwn: FY	Date: May-13	NO.
Ckd: Spec. Committee	Scale: NONE	ST-8

City Engineer

ST08.DWG

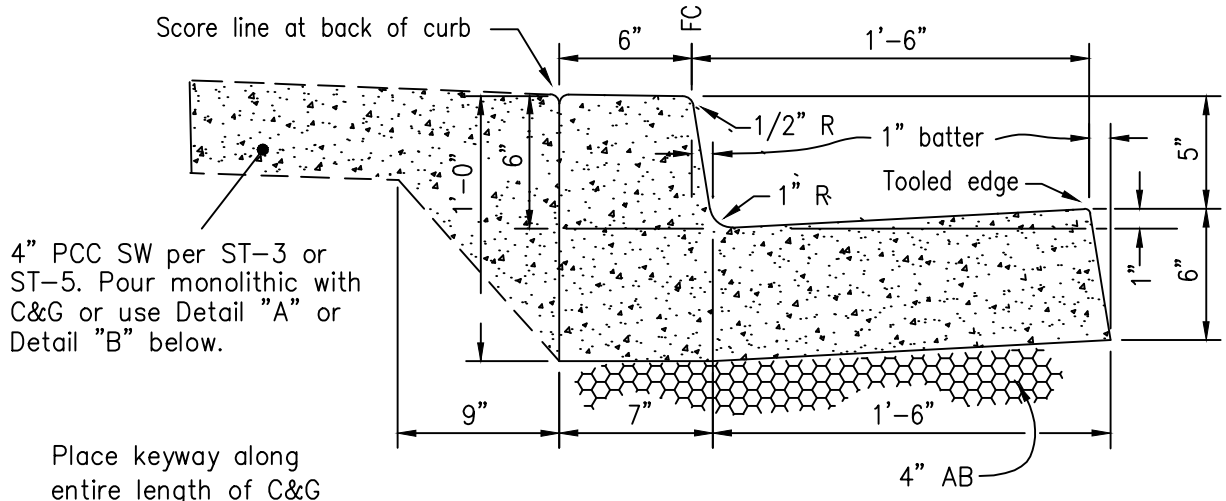

CURB & GUTTER

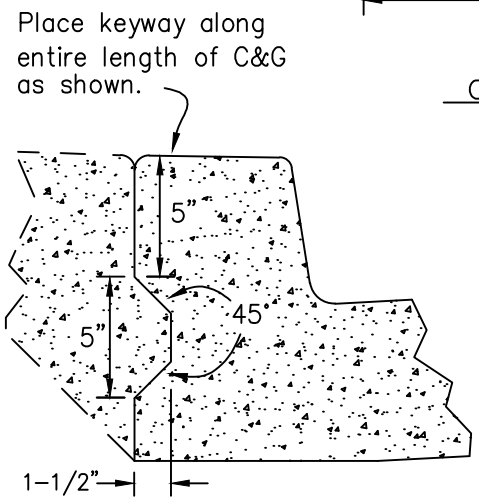

DETAIL "A"
KEYWAY

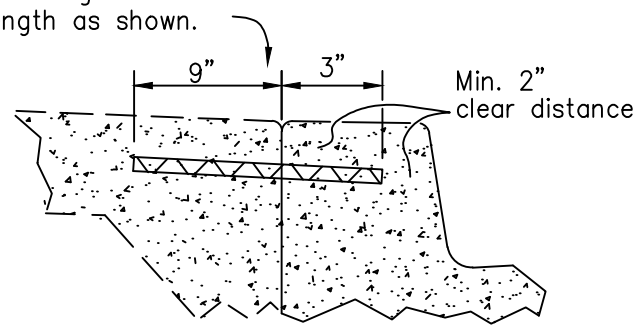

DETAIL "B"
DOWELS

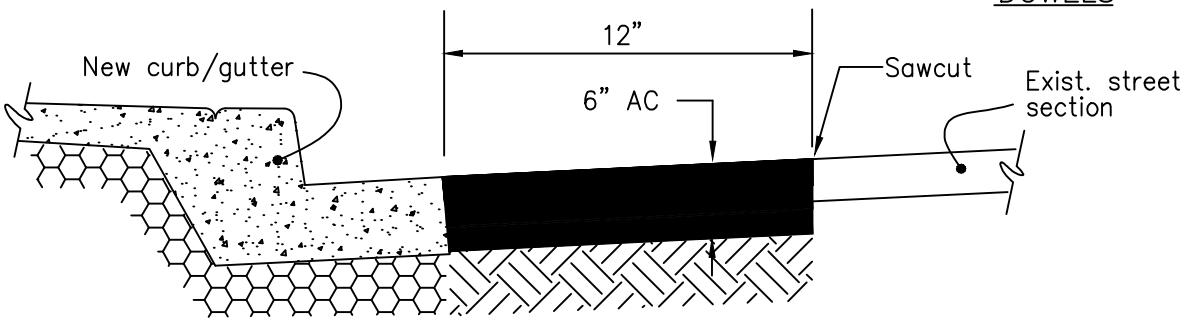

NEW OR REPLACEMENT CURB & GUTTER
AT EXISTING STREET

NOTE:

Curb, gutter, and sidewalk to be placed monolithically where possible. Where non-monolithic, place dowels and/or keyway as shown above.

User note:
These details shall be used in conjunction with all the City standard details and specifications. Refer to the City standard specifications for the materials, installation, testing, protective coatings, and other requirements.

Date	By	Rev.

CURB & GUTTER

CITY OF LIVERMORE
STANDARD DETAIL

Dwn: KY/KR	Date: May-13	NO.
Ckd: Spec. Committee	Scale: NONE	ST-9A

City Engineer

ST09A.DWG

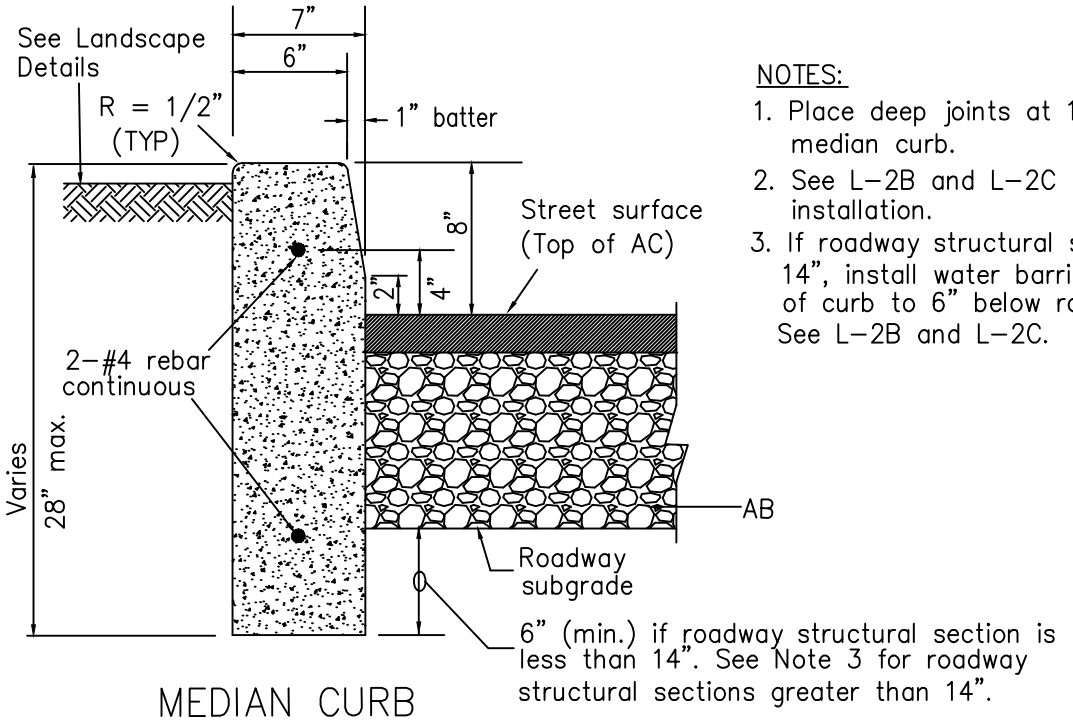

MEDIAN CURB

NOTES:

1. Place deep joints at 10' spacing along median curb.
2. See L-2B and L-2C for water barrier installation.
3. If roadway structural section is greater than 14", install water barrier extending from top of curb to 6" below roadway subgrade. See L-2B and L-2C.

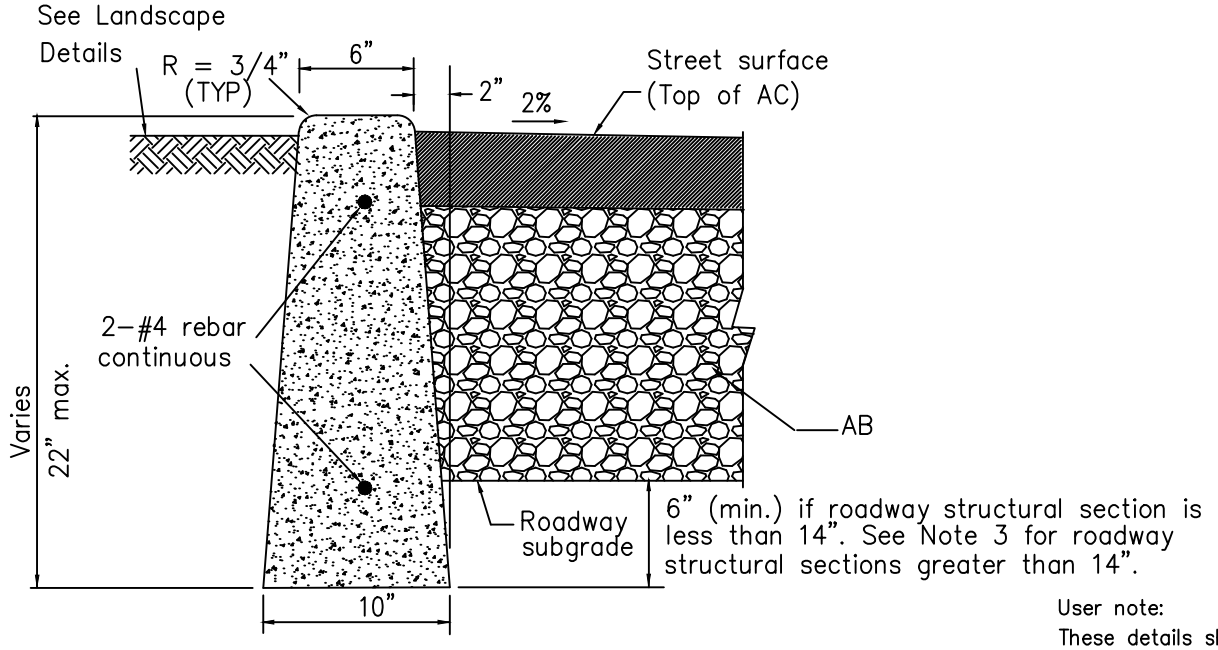

FLUSH CURB

User note:
These details shall be used in conjunction with all the City standard details and specifications. Refer to the City standard specifications for the materials, installation, testing, protective coatings, and other requirements.

Date	By	Rev.

MEDIAN CURB/FLUSH CURB (DEEP CURB)

CITY OF LIVERMORE
STANDARD DETAIL

Dwn: KY/KR	Date: May-13	NO.
Ckd: Spec. Committee	Scale: NONE	ST-9B

City Engineer

ST09B.DWG

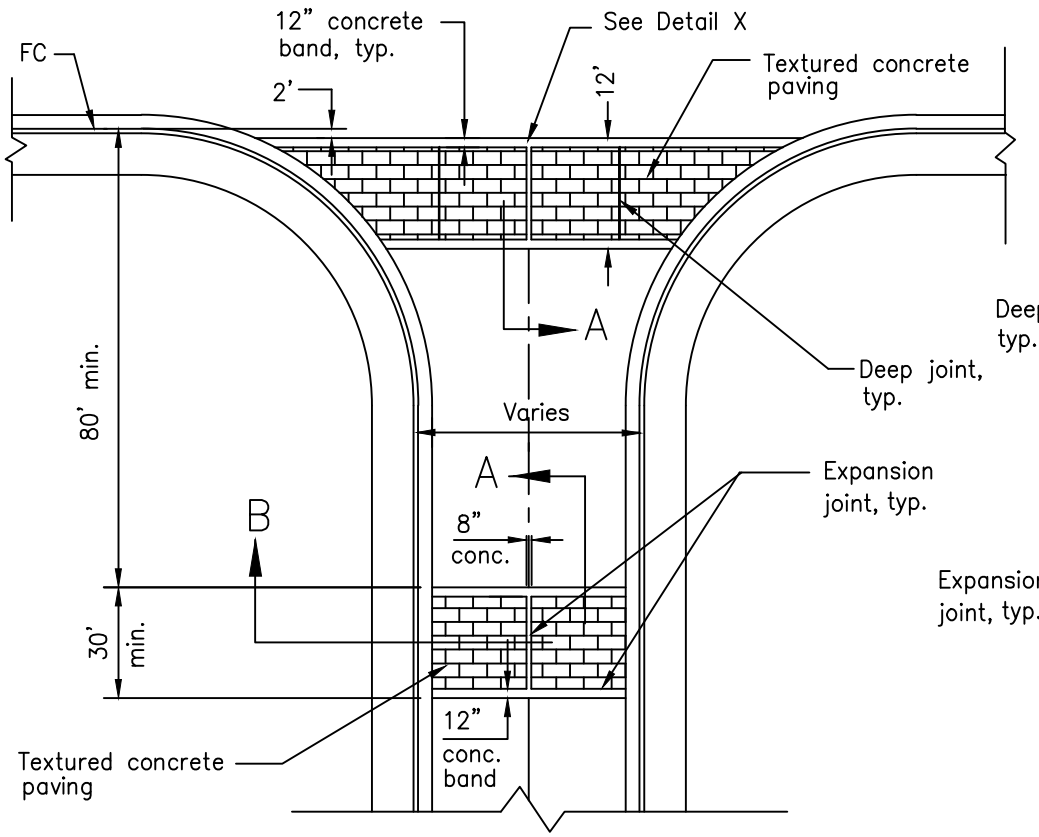

PLAN

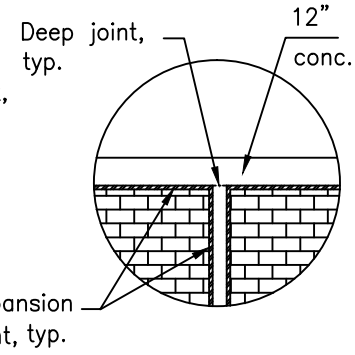

DETAIL X

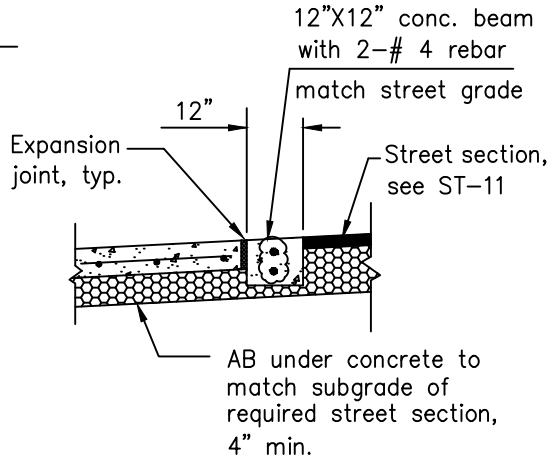

SECTION "A"

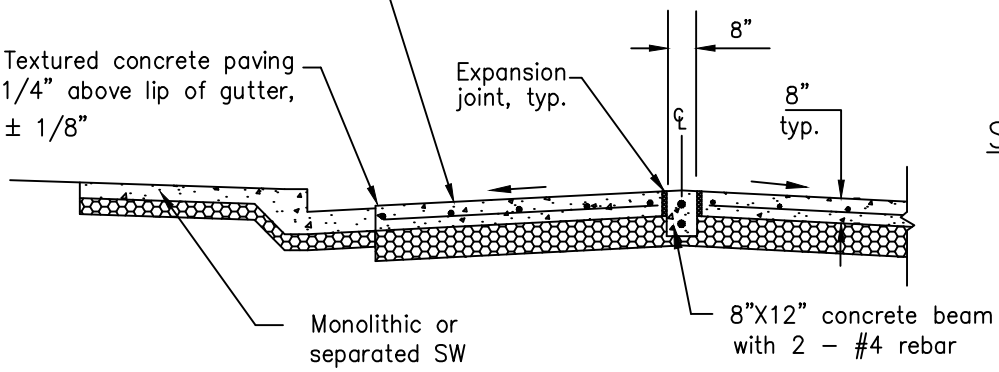

SECTION "B"

User note:
These details shall be used in conjunction with all the City standard details and specifications. Refer to the City standard specifications for the materials, installation, testing, protective coatings, and other requirements.

Date	By	Rev.

TEXTURED CONCRETE PAVING

CITY OF LIVERMORE
STANDARD DETAIL

Dwn: FY	Date: May-13	NO.
Ckd: Spec. Committee	Scale: NONE	ST-10
City Engineer		

ST10.DWG

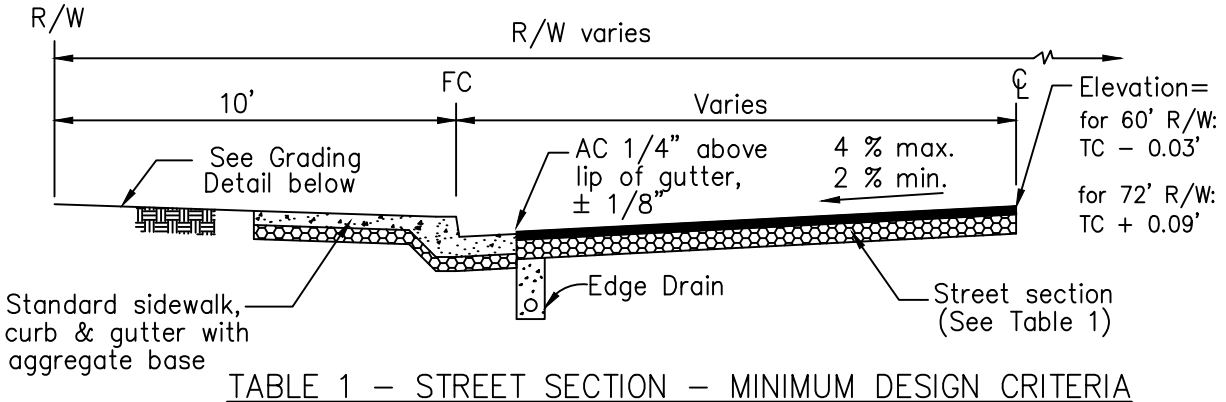

TABLE 1 – STREET SECTION – MINIMUM DESIGN CRITERIA

STREET TYPE	MIN. TRAFFIC INDEX	AC & BASE	
		MIN. AC	MIN. BASE
Private/townhouse/condo	NA	4.0"	6.0"–8.0" *
Cul–de–sac	NA	4.0"	6.0"–8.0" *
Local	NA	4.0"	6.0"–8.0" *
Collector (Residential) **	7.0	4.0"	8.0"
Major (Residential) **	9.0	5.5"	7.0"
Major (Industrial/Commercial)**	10.0	6.5"	7.0"
Frontage**	9.0	5.5"	7.0"
Industrial/Commercial**	9.0	5.5"	7.0"
Bus stops	in street area in turnout area	12" full depth AC 12" concrete. See ST–15	

* See Table 2 – Base Thickness Requirement
** Street section design to be based on Caltrans flexible pavement design method
Submit supporting data for traffic index calculation for City Engineer's approval

NOTES:

1. See ST–3, 4 & 5 for sidewalks.
2. See ST–9A for curb and gutter.
3. See ST–4, 6, 7, & 8 for driveways.
4. See ST–12 for utility locations.
5. See ST–2 for travel way and R/W widths.
6. Edge drain required at all park frontage, and at toe of slope or as required by the City Engineer.
   (Construct per Caltrans Standard Plan D102, Perforated Pipe Dia.=4")

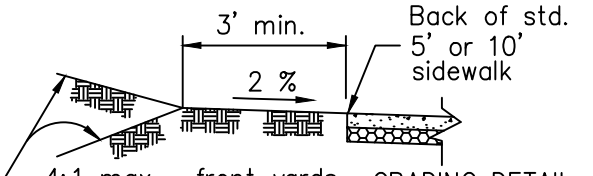

GRADING DETAIL
BEHIND SIDEWALK

Note: No retaining walls allowed within 3' of back of sidewalk.

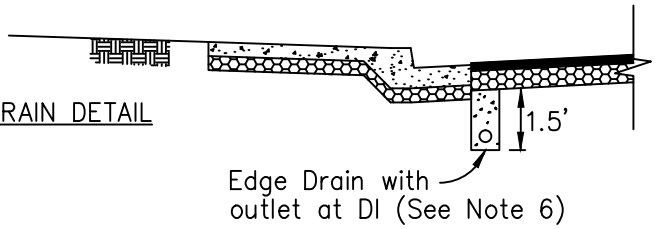

EDGE DRAIN DETAIL

User note:
These details shall be used in conjunction with all the City standard details and specifications. Refer to the City standard specifications for the materials, installation, testing, protective coatings, and other requirements.

Date	By	Rev.

ST011.DWG

STREET SECTION

CITY OF LIVERMORE
STANDARD DETAIL

Dwn: FY	Date: May–13	NO.
Ckd: Spec. Committee	Scale: NONE	ST–11

City Engineer

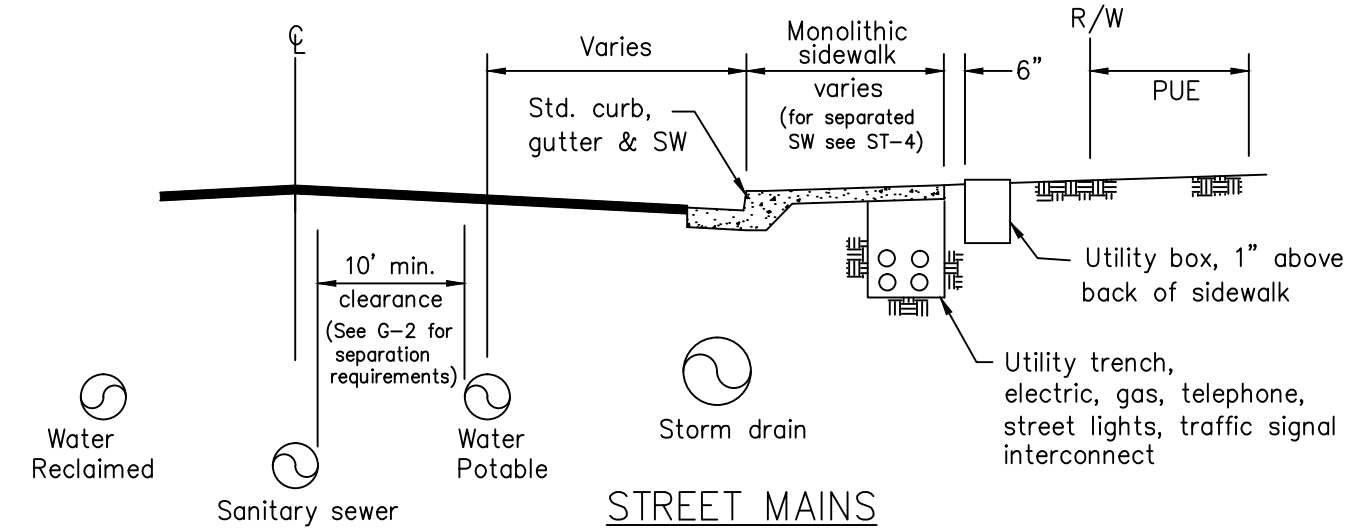

STREET MAINS

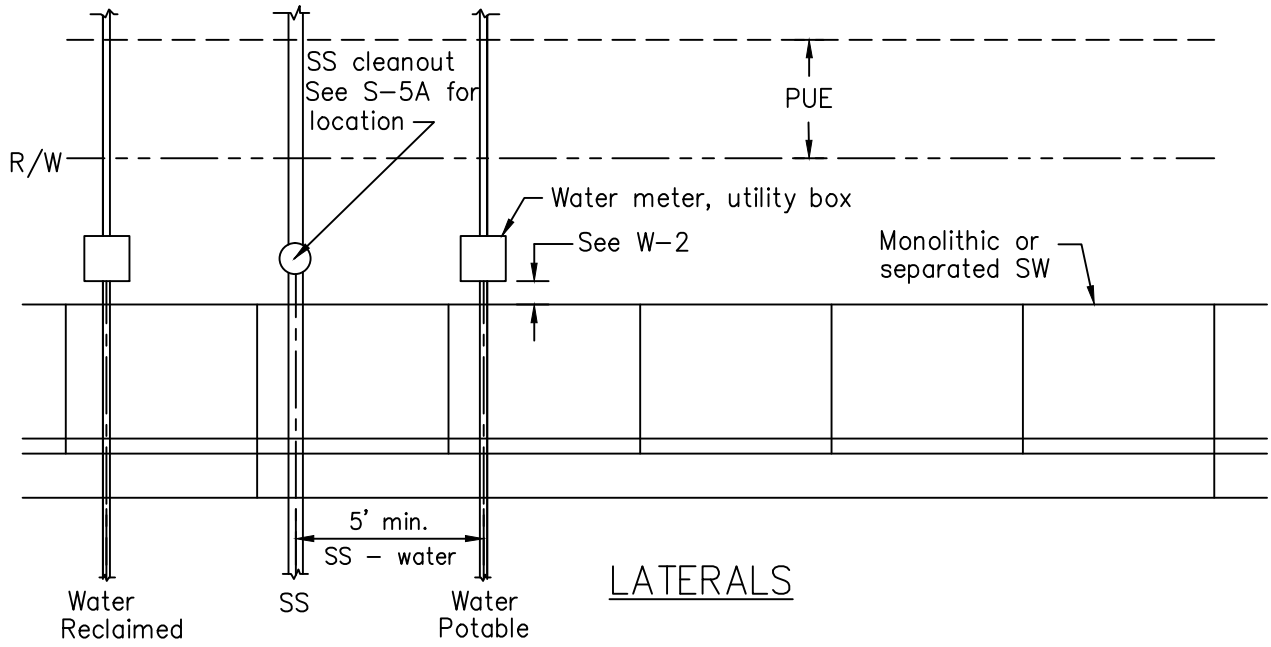

LATERALS

NOTES:

1. Water lines to be placed on the north or west side of the centerline.
2. See ST-3, 4, & 5 for sidewalks.
3. See ST-4, 6, 7, & 8 for driveways.
4. See ST-9A for curb and gutter.
5. Utility services shall be located a minimum of 2' away from any driveway. No utility services shall be placed beneath a driveway unless otherwise approved by the Engineer.
6. Utility boxes in driveway areas to have traffic lids.
7. A 10' distance must be maintained between reclaimed and portable water

User note:
These details shall be used in conjunction with all the City standard details and specifications. Refer to the City standard specifications for the materials, installation, testing, protective coatings, and other requirements.

Date	By	Rev.

UTILITY LOCATIONS

CITY OF LIVERMORE
STANDARD DETAIL

Dwn: FY	Date: May-13	NO.
Ckd: Spec. Committee	Scale: NONE	ST-12

City Engineer

ST12.DWG

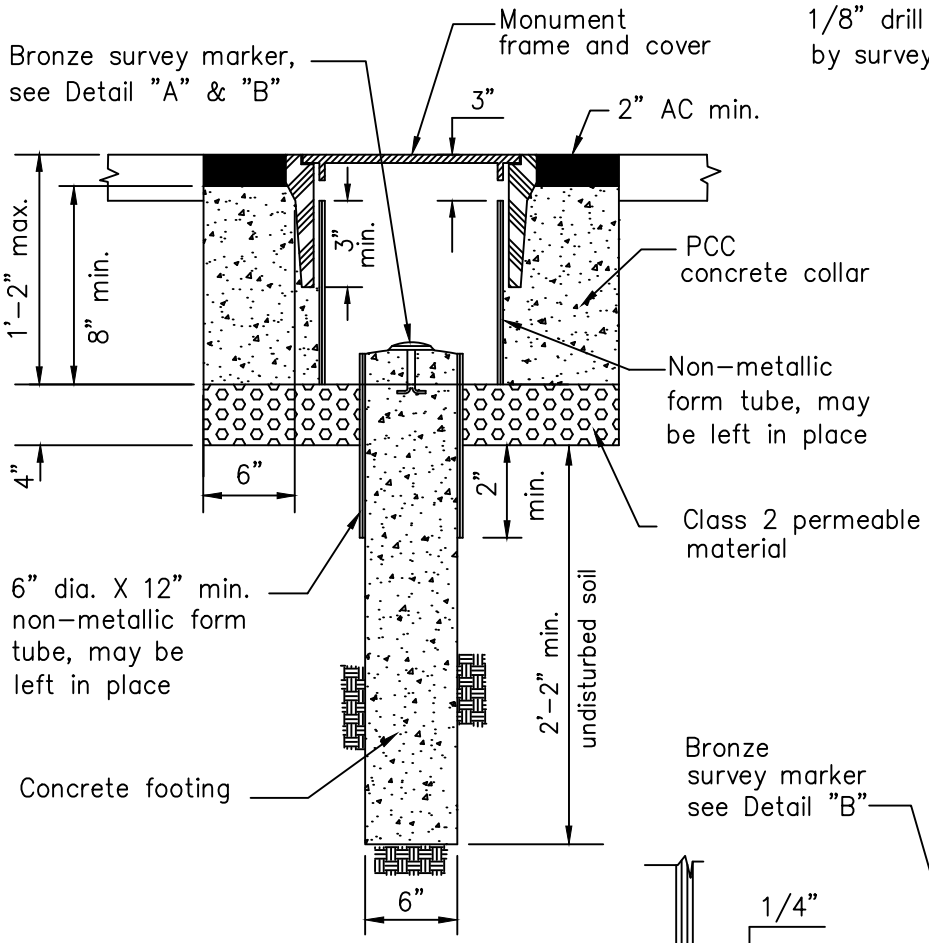

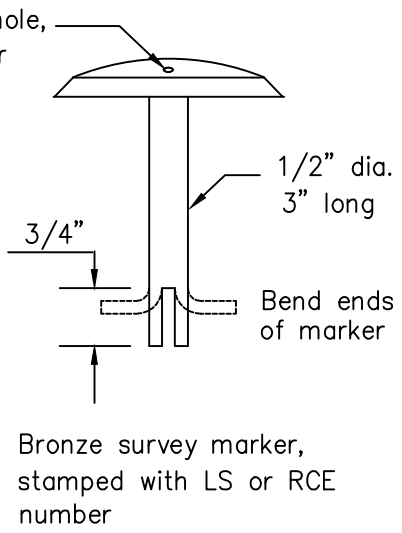

DETAIL "B"

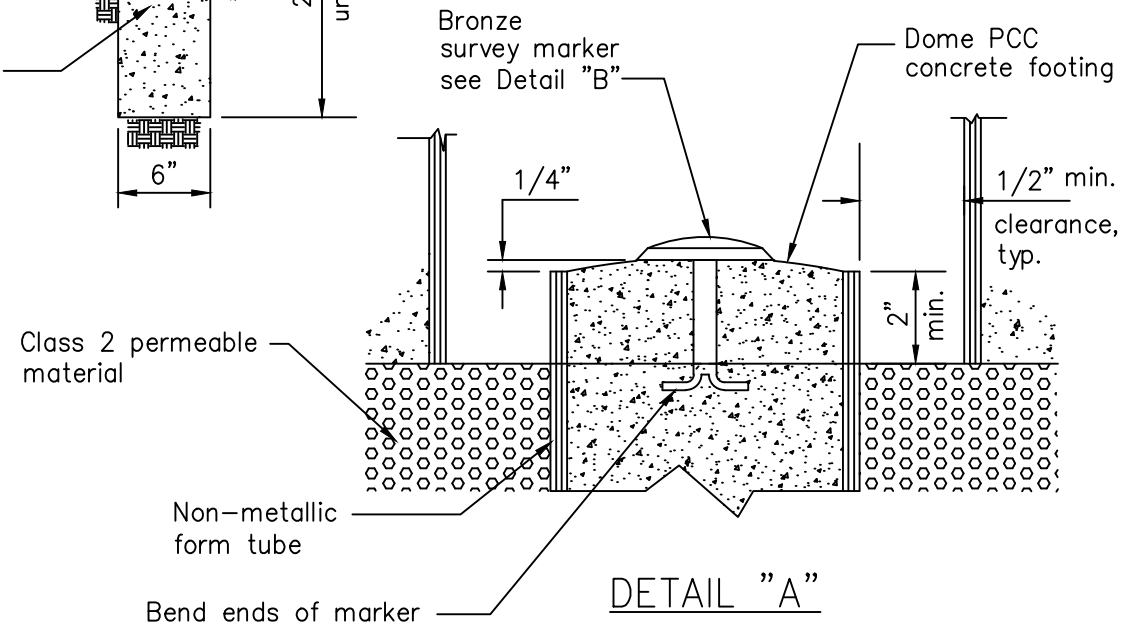

DETAIL "A"

User note:
These details shall be used in conjunction with all the City standard details and specifications. Refer to the City standard specifications for the materials, installation, testing, protective coatings, and other requirements.

Date	By	Rev.

MONUMENT

CITY OF LIVERMORE
STANDARD DETAIL

Dwn: KY	Date: May-13	NO.
Ckd: Spec. Committee	Scale: NONE	ST-13

City Engineer

ST13.DWG

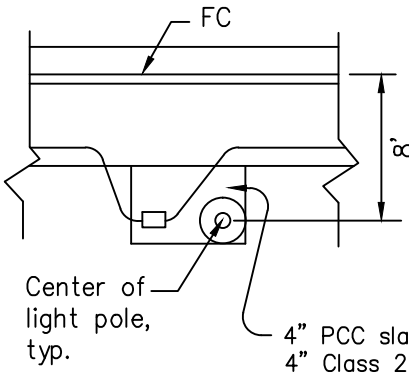

5' SIDEWALK
Luminaire Arm = 12'

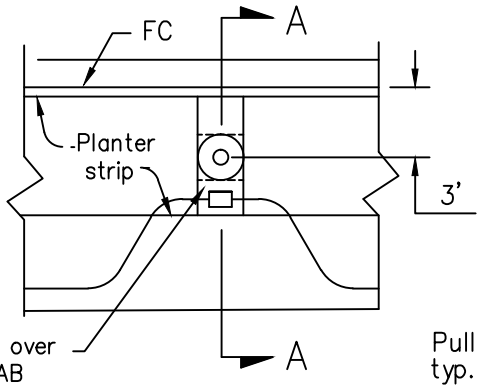

SEPARATED SIDEWALK
Luminaire Arm = 6'

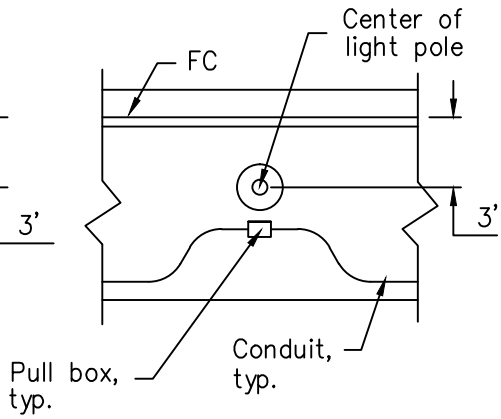

10' SIDEWALK
Luminaire Arm = 6'

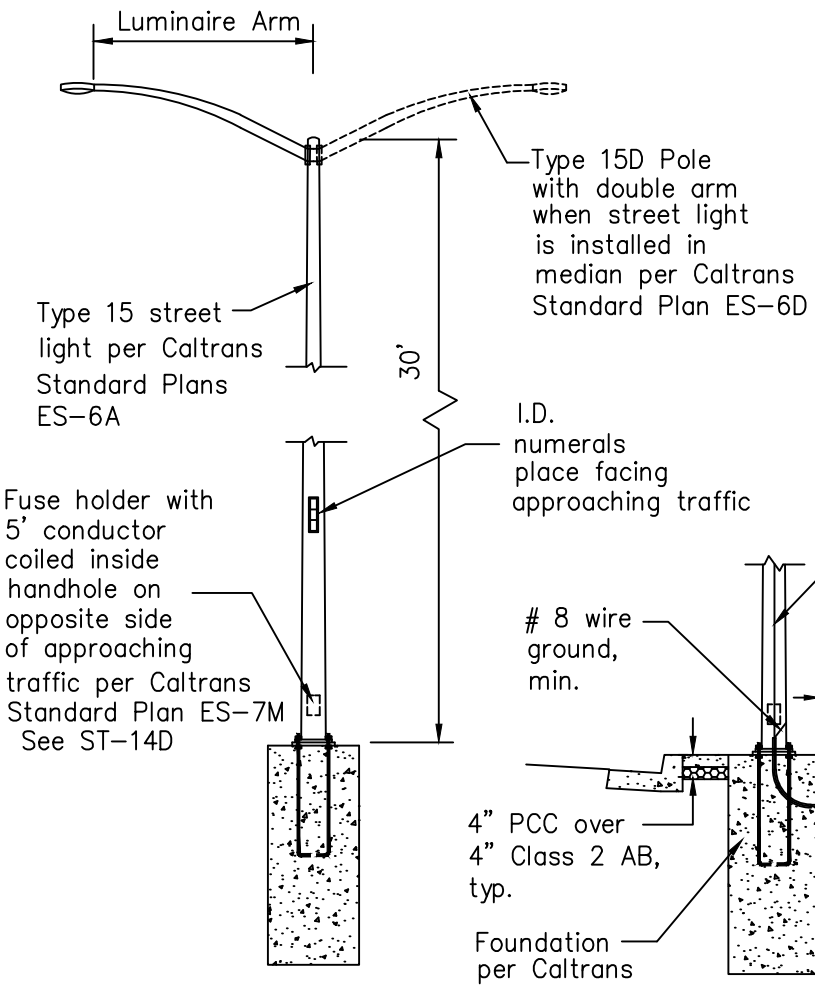

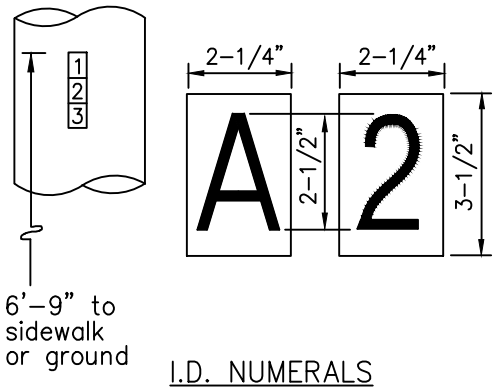

I.D. NUMERALS
TYPICAL DIMENSIONS

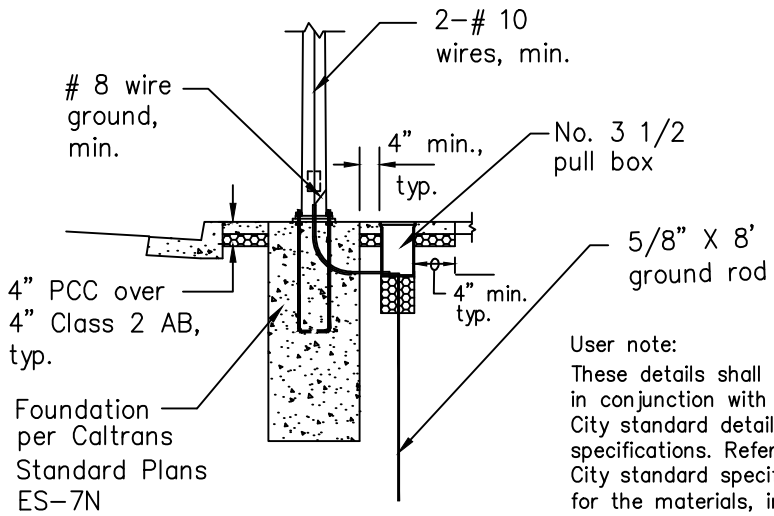

SECTION A-A

User note:
These details shall be used in conjunction with all the City standard details and specifications. Refer to the City standard specifications for the materials, installation, testing, protective coatings, and other requirements.

Date	By	Rev.

STANDARD STREET LIGHT

CITY OF LIVERMORE
STANDARD DETAIL

Dwn: FY	Date: May-13	NO.
Ckd: Spec. Committee	Scale: NONE	ST-14A

City Engineer

ST14A.DWG

MAXIMUM STREET WIDTH (FC TO FC)	MEDIAN WIDTH	STREET LIGHT			
		LOCATION	PATTERN	MAXIMUM SPACING	LED LUMINAIRE
40'	0	roadside	staggered	* 200'	LEOTEK Green Cobra GCJ1-30J-MV-40K-2R-045 With house side shield or approved or approved equal(Max Wattage-25W Min Delivered Lumens-3900 Lm)
52'	0	roadside	staggered	* 175'	
84'	16'	roadside	staggered	160' each side	LEOTEK Green Cobra GCJ1-30J-MV-40K-2R-055 approved equal(Max Wattage-34W Min Delivered Lumens-5400 Lm)
		median	dual arm centered	200'	
96'	28'	roadside	staggered	160' each side	
		median	dual arm centered	180'	
108'	16'	roadside	staggered	200' each side	LEOTEK Green Cobra GCJ3-30J-MV-40K-2R-095 approved equal(Max Wattage-67W Min Delivered Lumens-9300 Lm)
		median	dual arm centered	200'	
120'	28'	roadside	staggered	200' each side	
		median	dual arm centered	200'	

* NOTE: The maximum street light spacing may be increased by 40% on industrial streets up to 52' wide.

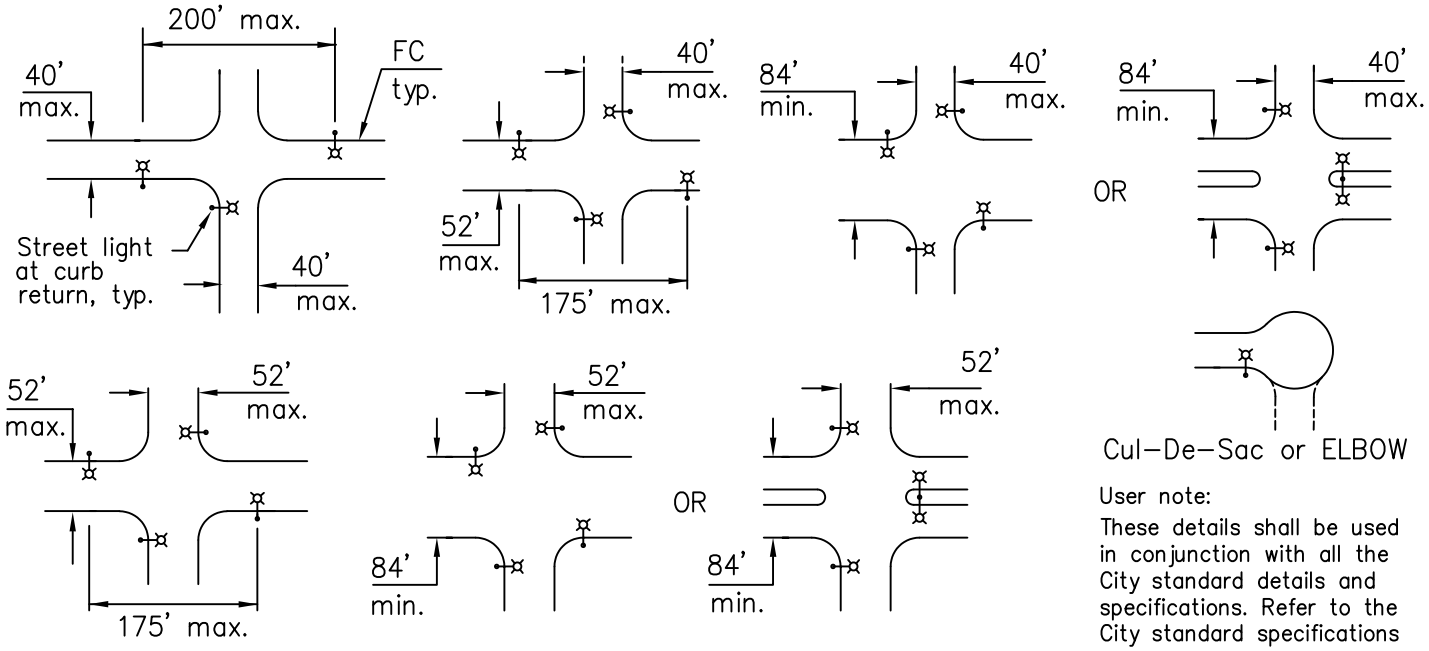

MINIMUM INTERSECTION AND CUL-DE-SAC LIGHTING REQUIREMENTS

User note:
These details shall be used in conjunction with all the City standard details and specifications. Refer to the City standard specifications for the materials, installation, testing, protective coatings, and other requirements.

Date	By	Rev.

STANDARD STREET LIGHT LAYOUT

CITY OF LIVERMORE
STANDARD DETAIL

Dwn: KY/HI	Date: Sept-22	NO.
Ckd: Spec. Committee	Scale: NONE	ST-14B

City Engineer

ST14B.DWG

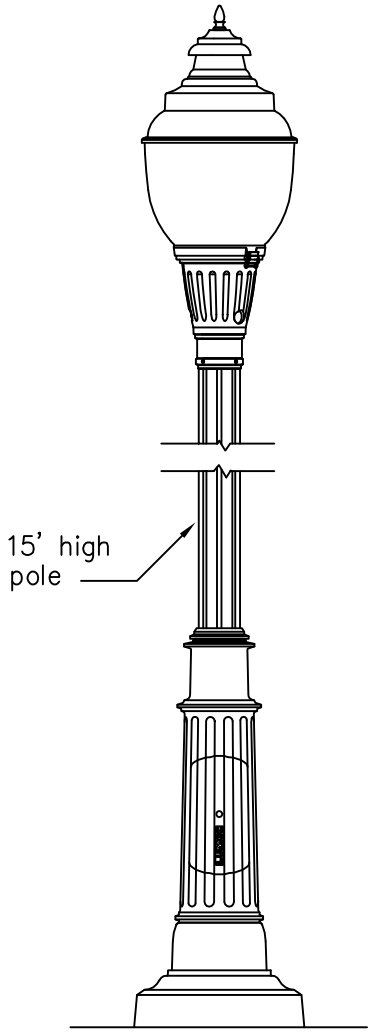

LUMEC LUMINAIRE
AND POLE

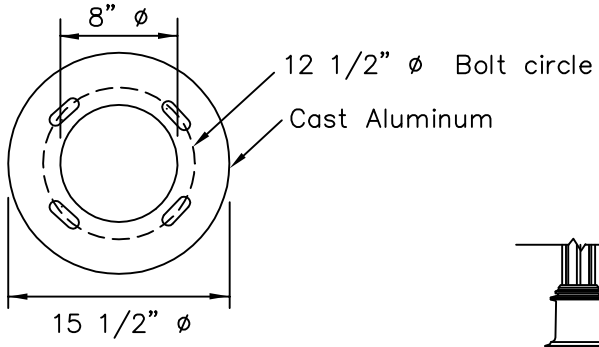

ANCHOR
PLATE

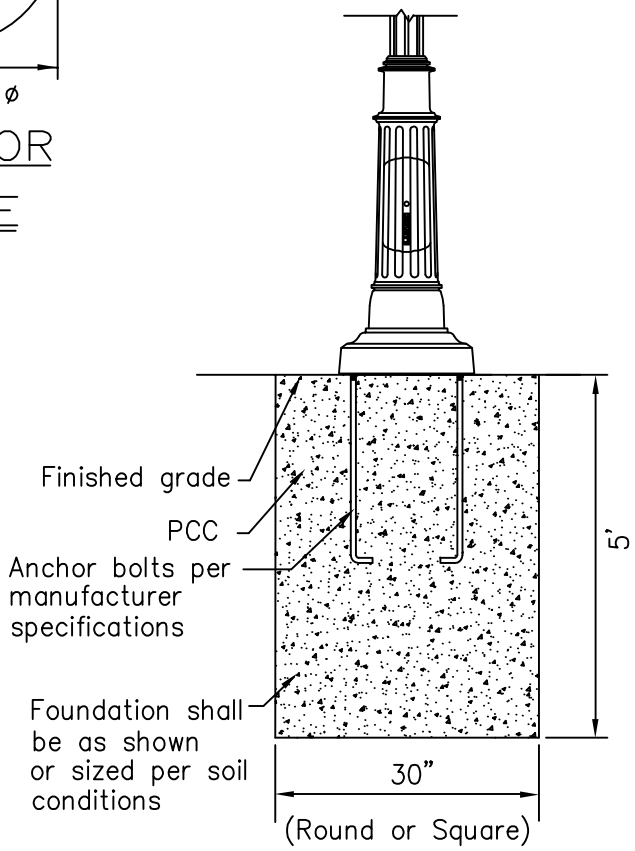

TYPICAL FOUNDATION

NOTE:

1. PULL BOX LOCATION PER ST–14A
2. THIS STREET LIGHT TO BE INSTALLED IN ALL AREAS OF THE CITY EXCEPT WHERE THE DOWNTOWN AND FIRST STREET LIGHT LOCATIONS ARE SPECIFIED ON DETAIL ST–14E

DECORATIVE STREET LIGHT LAYOUT

MAXIMUM STREET WIDTH FC TO FC	STREET LIGHT		LED LUMINAIRE	
	LOCATION	PATTERN	SIZE WATT	MAXIMUM SPACING
40'	roadside	staggered	65	160'

User note:
These details shall be used in conjunction with all the City standard details and specifications. Refer to the City standard specifications for the materials, installation, testing, protective coatings, and other requirements.

Date	By	Rev.

DECORATIVE
STREET LIGHT

CITY OF LIVERMORE
STANDARD DETAIL

Dwn: FY	Date: May–13	NO.
Ckd: Spec. Committee	Scale: NONE	ST–14C

City Engineer

ST14C.DWG

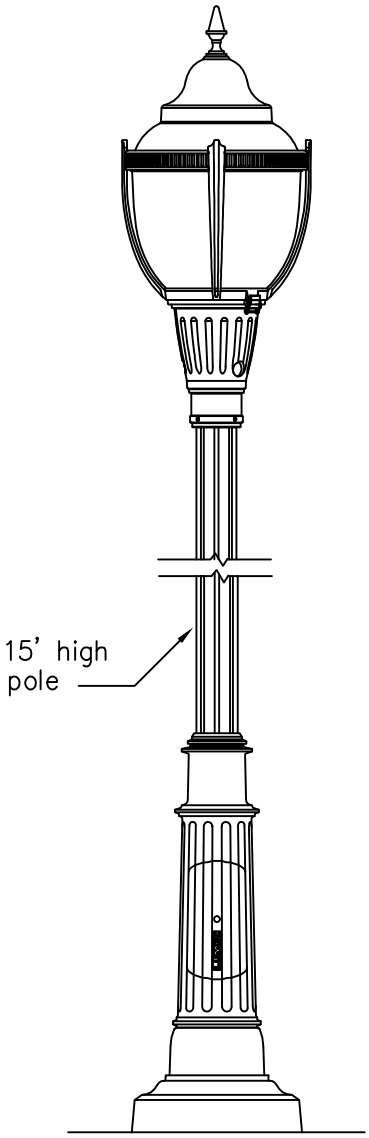

LUMEC LUMINAIRE
AND POLE

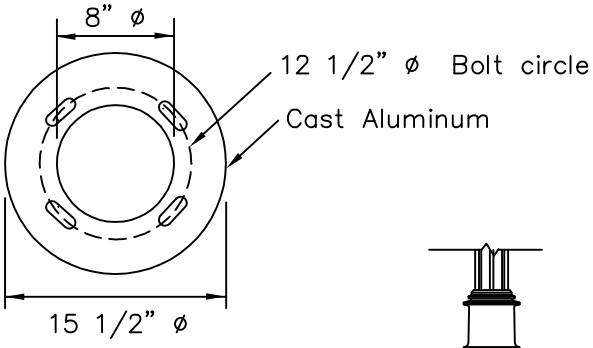

ANCHOR
PLATE

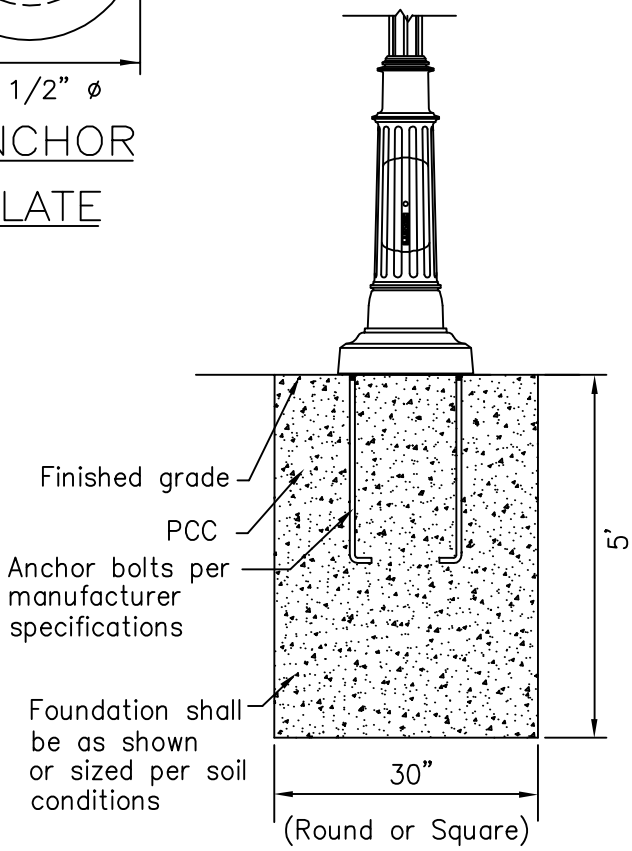

TYPICAL
FOUNDATION

NOTE:

1. PULL BOX LOCATION PER ST–14A

DECORATIVE STREET LIGHT LAYOUT

STREET LIGHT		LED LUMINAIRE	
LOCATION	PATTERN	SIZE WATT	MAXIMUM SPACING
roadside	staggered	90	100'

User note:
These details shall be used in conjunction with all the City standard details and specifications. Refer to the City standard specifications for the materials, installation, testing, protective coatings, and other requirements.

Date	By	Rev.

ST14C.DWG

DOWNTOWN DECORATIVE STREET LIGHT

CITY OF LIVERMORE
STANDARD DETAIL

Dwn: FY	Date: May–13	NO.
Ckd: Spec. Committee	Scale: NONE	ST–14D

City Engineer

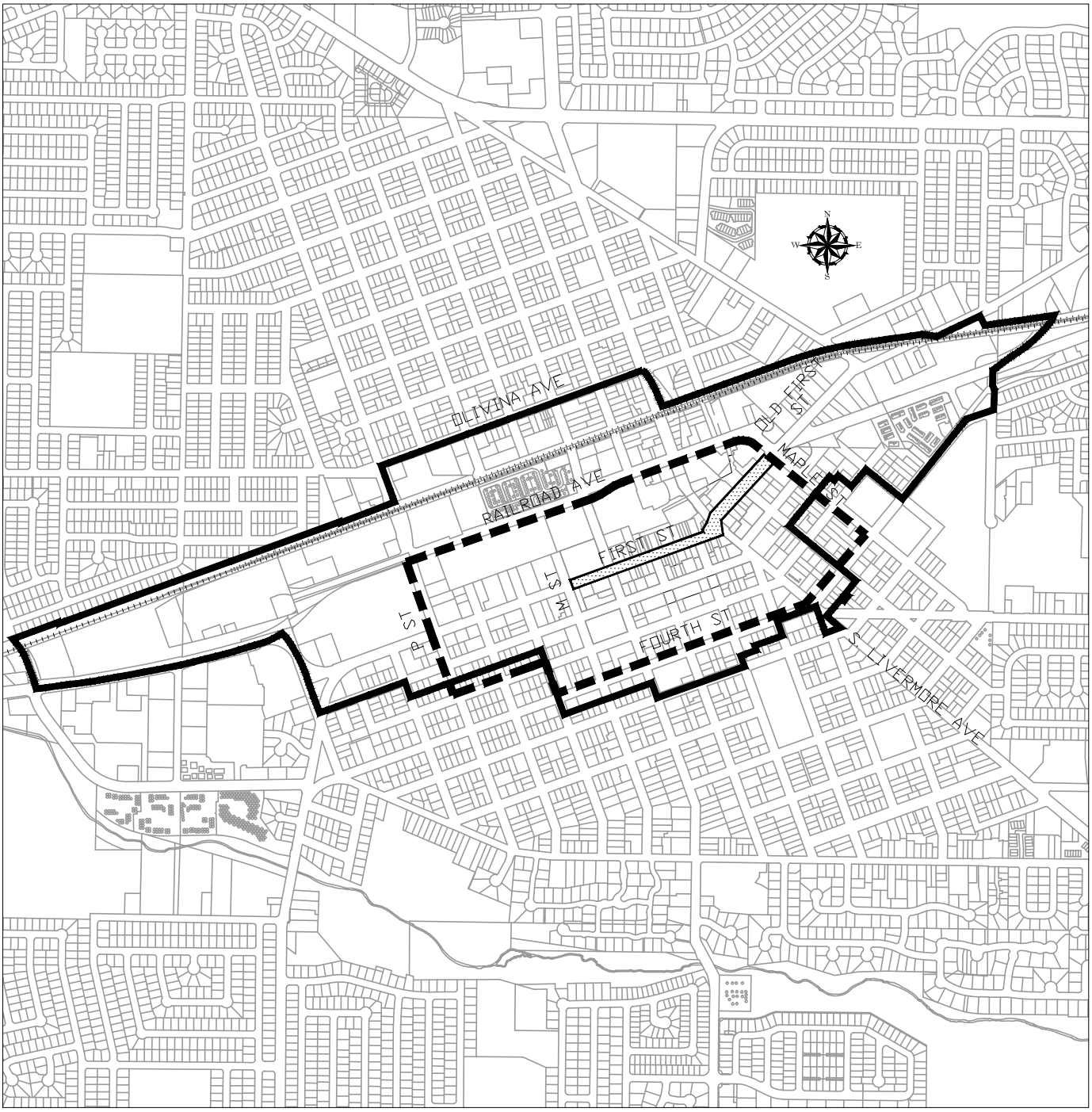

STREET LIGHT BOUNDARY

First Street Decorative Street Light to be installed on First Street in the Downtown Core Area between Old First Street and M Street only. (See detail ST-14F)

Downtown Decorative Street Light to be installed within this boundary except for the Downtown Core Area of First Street as indicated above. (See detail ST-14D)

Downtown Specific Plan Area Boundary.

User note:
These details shall be used in conjunction with all the City standard details and specifications. Refer to the City standard specifications for the materials, installation, testing, protective coatings, and other requirements.

Date	By	Rev.

DOWNTOWN DECORATIVE STREET LIGHT

CITY OF LIVERMORE
STANDARD DETAIL

Dwn: FY	Date: May-13	NO.
Ckd: Spec. Committee	Scale: NONE	ST-14E

City Engineer

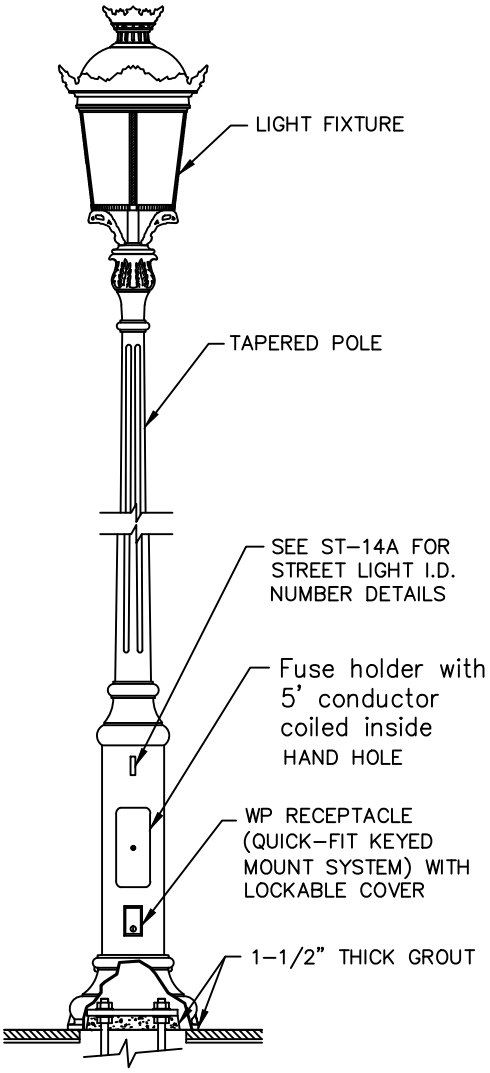

LUMEC LUMINAIRE AND POLE

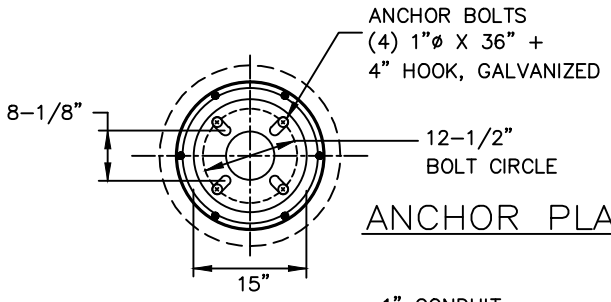

ANCHOR PLATE

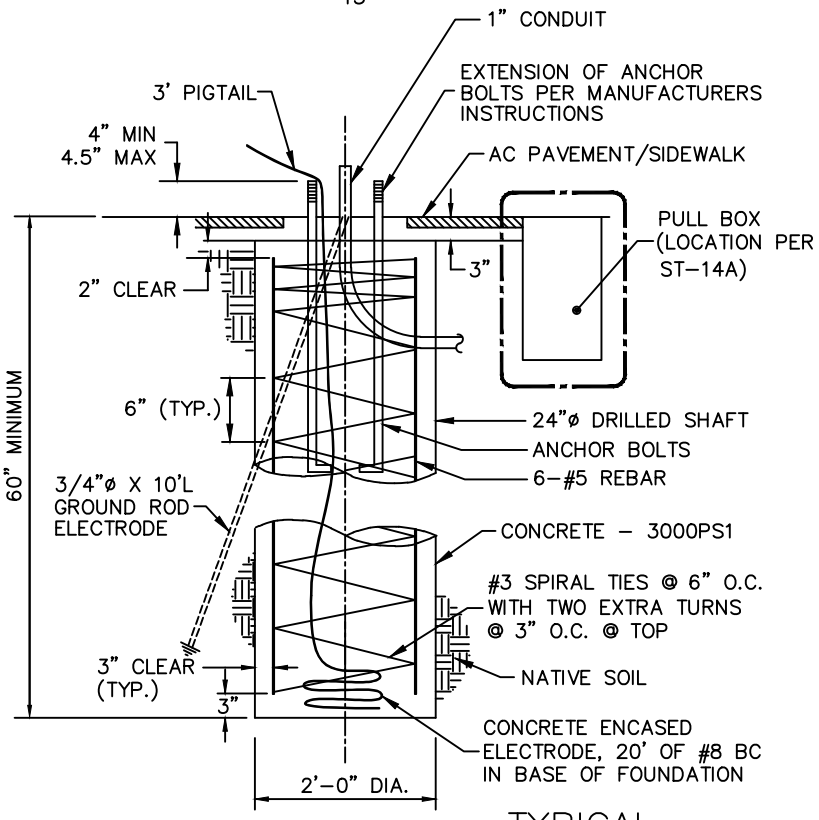

TYPICAL FOUNDATION

DECORATIVE STREET LIGHT LAYOUT

	LUMINAIRE TYPE	POLE HEIGHT	POLE SPACING
MAIN CORE	100w METAL HALIDE	9'	50'
THIS LIGHT TO BE USED ON FIRST STREET BETWEEN OLD FIRST ST. AND M STREET ONLY			
SEE ST-14E FOR STREET LIGHT USE BOUNDARIES			

User note:
These details shall be used in conjunction with all the City standard details and specifications. Refer to the City standard specifications for the materials, installation, testing, protective coatings, and other requirements.

Date	By	Rev.

FIRST STREET DECORATIVE STREET LIGHT

CITY OF LIVERMORE
STANDARD DETAIL

Dwn: FY	Date: May-13	NO.
Ckd: Spec. Committee	Scale: NONE	ST-14F
City Engineer		

ST14D.DWG

ST15.DWG

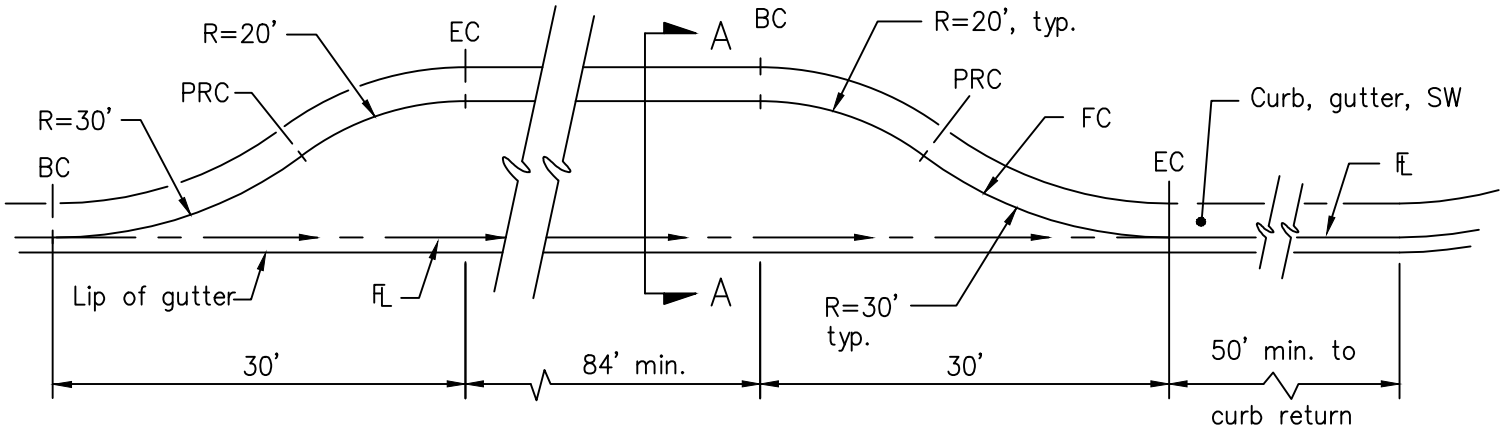

BC = begin curve
PRC = point of reverse curve
EC = end curve

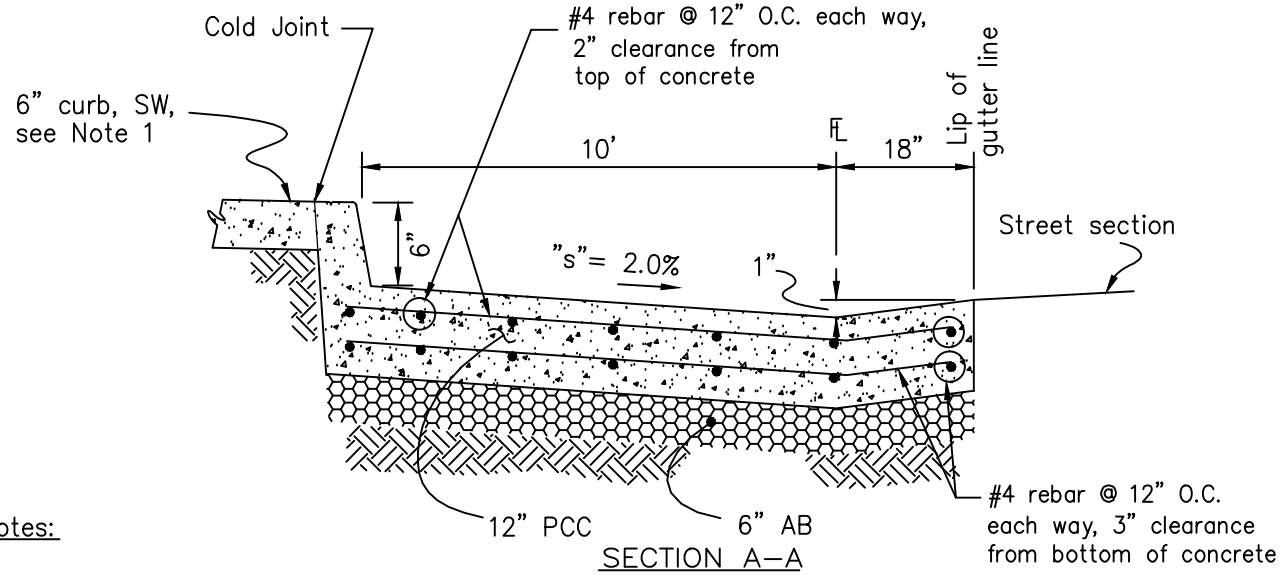

SECTION A–A

User note:
These details shall be used in conjunction with all the City standard details and specifications. Refer to the City standard specifications for the materials, installation, testing, protective coatings, and other requirements.

Notes:

1. See ST–9A or 9B for curb detail.
2. FL elevation to control TC elevation.
3. Bus turnout to be installed beyond intersection, not immediately before intersection.
4. See ST–11 for bus stop structural section in paved areas.

Date	By	Rev.

BUS TURNOUT

CITY OF LIVERMORE
STANDARD DETAIL

Dwn: FY
Date: May–13
Ckd: Spec. Committee
Scale: NONE
City Engineer

NO. ST–15

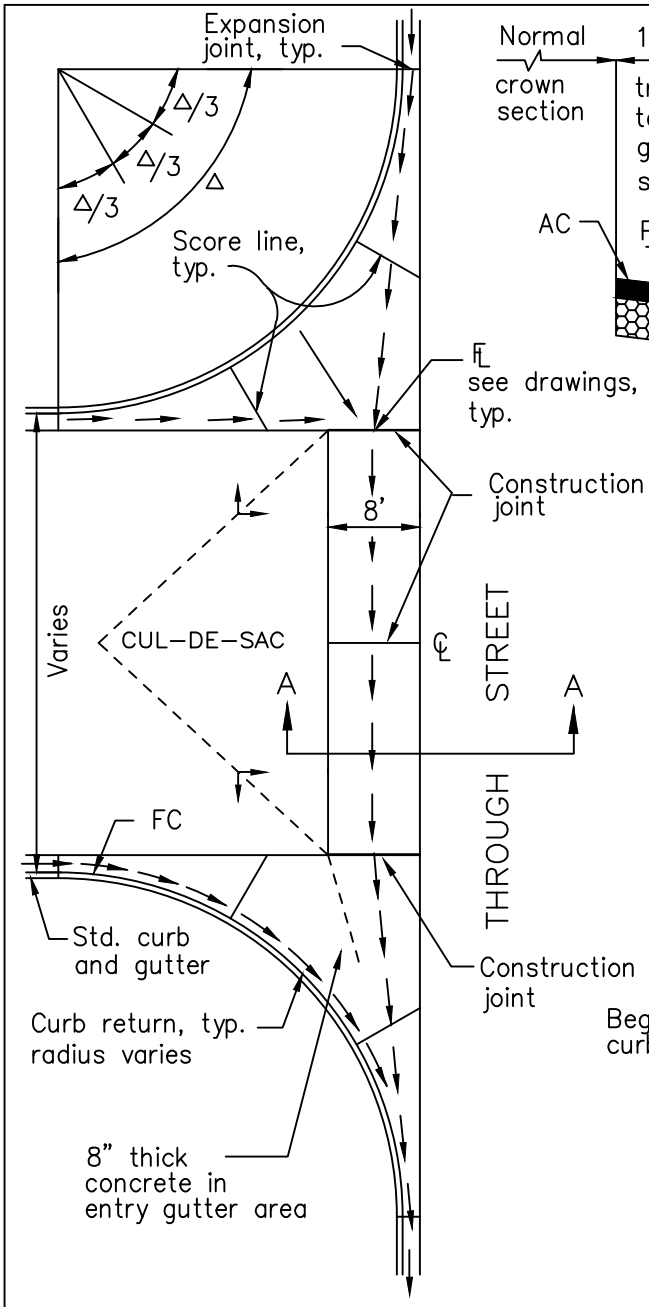

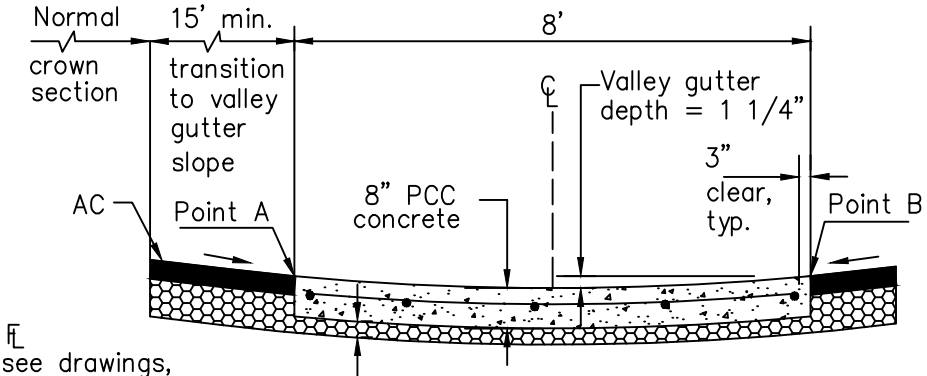

4" AB minimum thickness.
If total structural section thickness of Cul-de-sac exceeds 12", AB thickness shall be increased to match total Cul-de-sac structural section thickness.

SECTION "A-A"

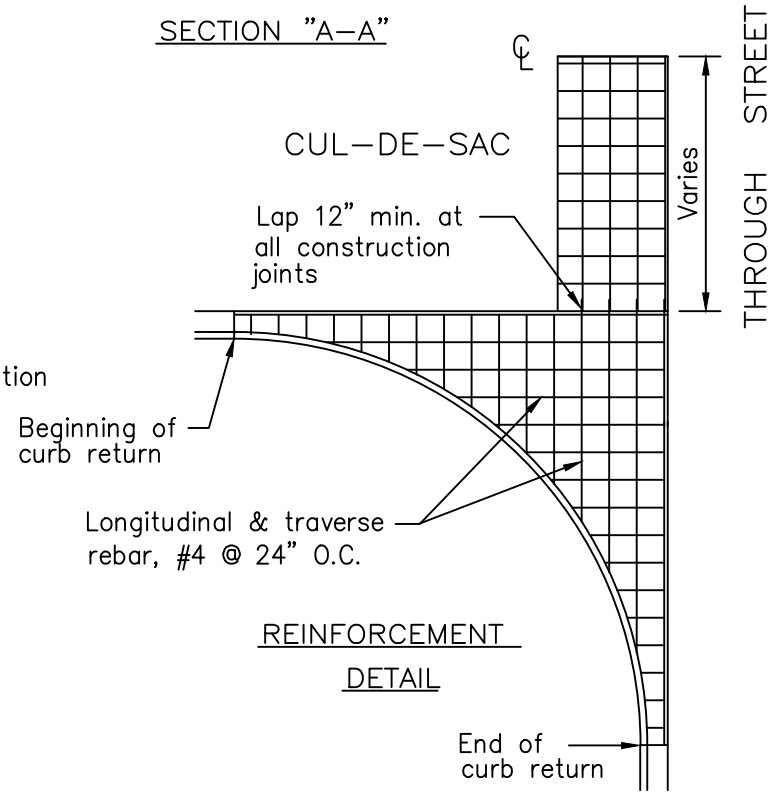

REINFORCEMENT DETAIL

NOTES:

1. See ST-9A for curb and gutter.
2. Points A & B shall be at the same elevation.
3. Pavement replacement for existing street shall be approved on a case by case basis by the Engineer.

User note:
These details shall be used in conjunction with all the City standard details and specifications. Refer to the City standard specifications for the materials, installation, testing, protective coatings, and other requirements.

Date	By	Rev.

ST16.DWG

VALLEY GUTTER

CITY OF LIVERMORE
STANDARD DETAIL

Dwn: KY	Date: May-13	NO.
Ckd: Spec. Committee	Scale: NONE	ST-16

City Engineer

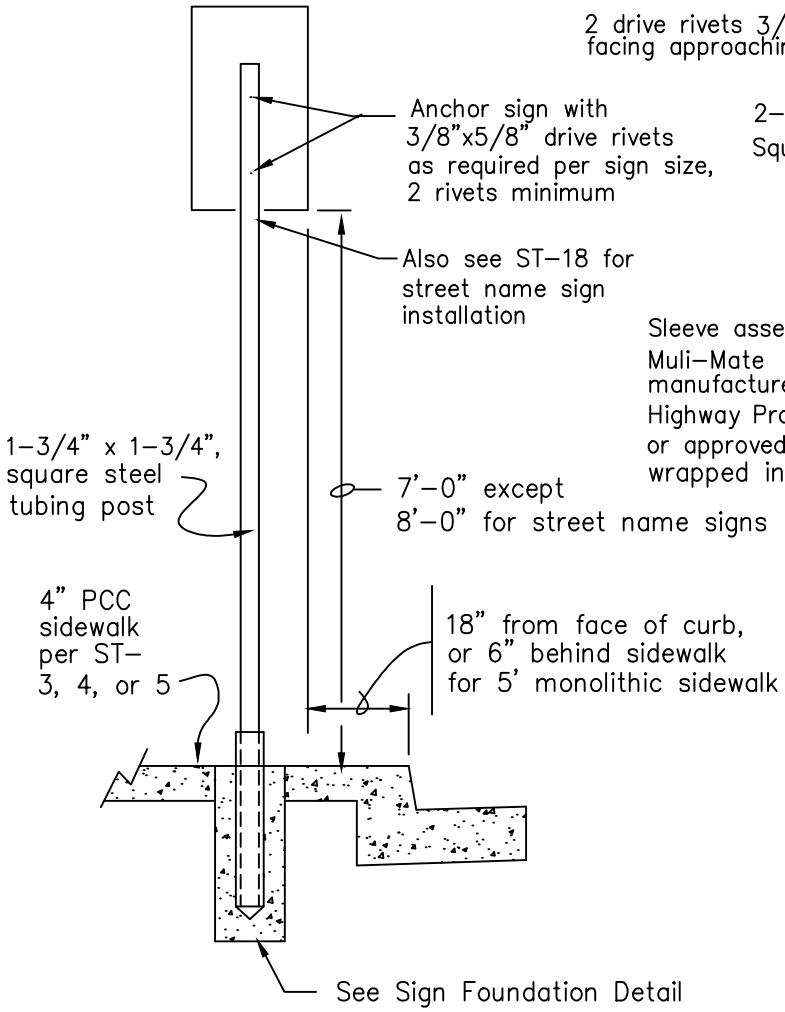

STEEL POST

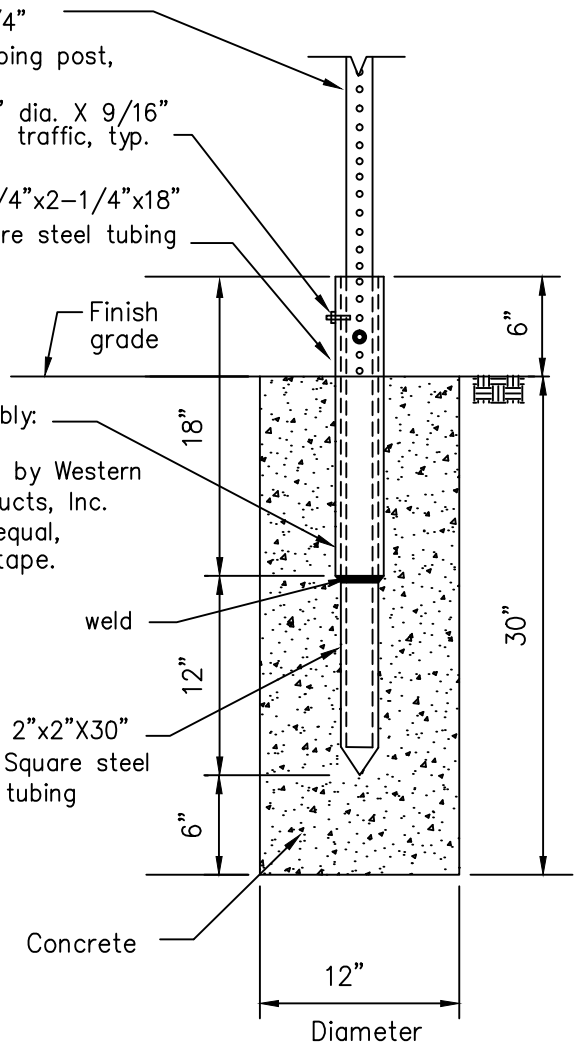

SIGN FOUNDATION DETAIL

NOTES:

1. See ST-18 for street name sign requirements.
2. See ST-22 for median island sign requirements.

User note:
These details shall be used in conjunction with all the City standard details and specifications. Refer to the City standard specifications for the materials, installation, testing, protective coatings, and other requirements.

Date	By	Rev.

ROADSIDE SIGN/POST INSTALLATION

CITY OF LIVERMORE
STANDARD DETAIL

Dwn: KY/KR	Date: May-13	NO.
Ckd: Spec. Committee	Scale: NONE	ST-17

City Engineer

ST17.DWG

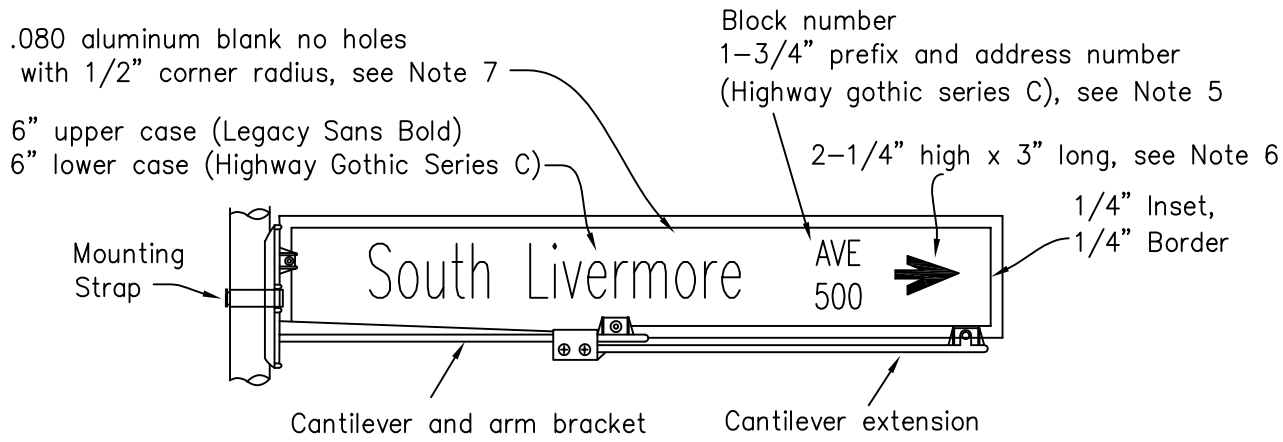

STREET NAME SIGN INSTALLATION ON A STREET LIGHT

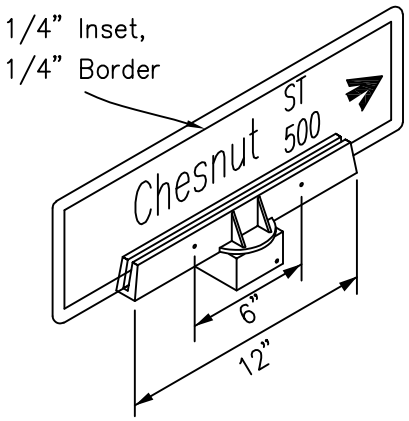

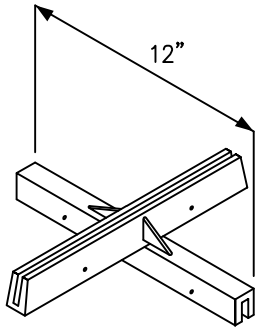

90 DEGREE CROSSPIECE 12"

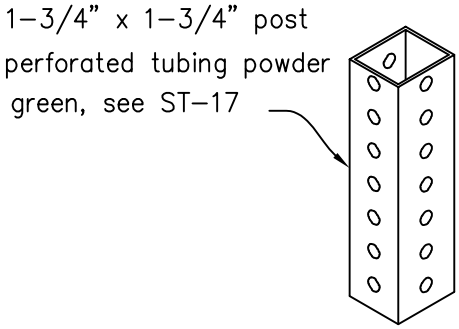

POST

NOTES:

1. Reflective sheeting material 3M DG3 4090 white.
   Electro cut film 3M 1177c green reserve weed.
2. See ST-17 for pole installation.
3. Bottom of lowest sign on post to be 8'-0" min. above finish grade, and bottom of lowest sign on street light to be 10'-0" above finished grade.
4. Signs shall be installed 18" behind face of curb or 6" behind 5' monolithic sidewalk.
5. Block number to denote highest address number adjacent to intersection by hundreds (or by tens if applicable).
6. Arrow to point in direction of increase in address. Omit arrow if the street does not continue in the direction of increase.
7. The size of the street name sign blank depends on how many letters are in the name:

24" x 9 "	1-5 letters
30" x 9 "	6-8 letters
36" x 9 "	9-12 letters
42" x 9 "	13+ letters

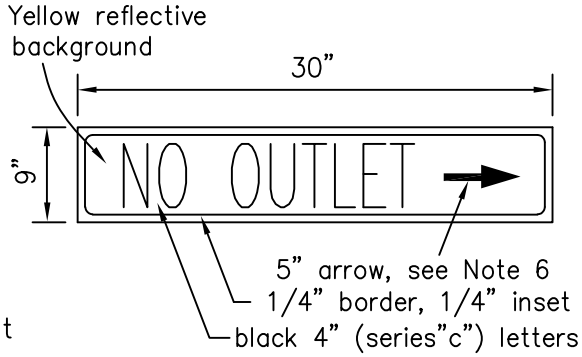

W14-2a SPECIAL

W14-2a (Rt) SPECIAL SHOWN

User note:
These details shall be used in conjunction with all the City standard details and specifications. Refer to the City standard specifications for the materials, installation, testing, protective coatings, and other requirements.

Date	By	Rev.

STREET NAME SIGN AND W14-2a SPECIAL SIGN

CITY OF LIVERMORE
STANDARD DETAIL

Dwn: KY/KR/HI	Date: Apr-23	NO.
Ckd: Spec. Committee	Scale: NONE	ST-18A

City Engineer

ST18.DWG

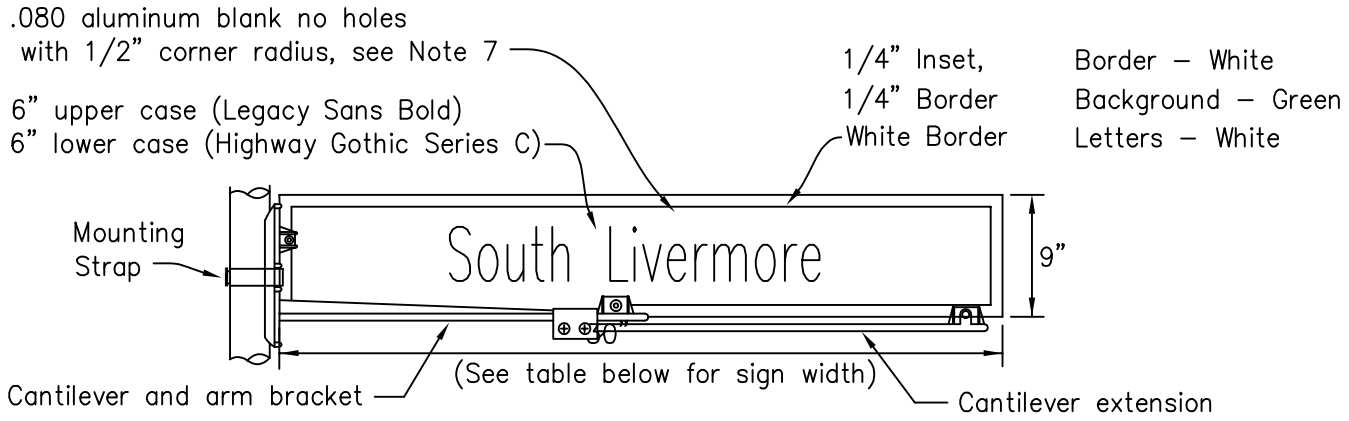

STREET NAME SIGN INSTALLATION ON A STREET LIGHT

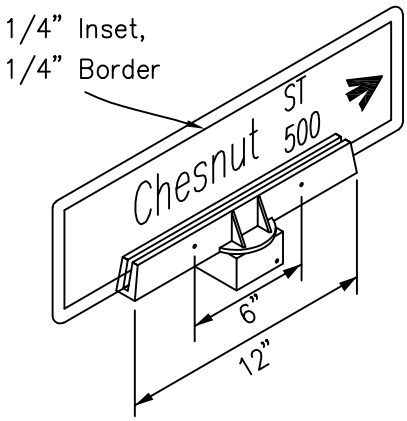

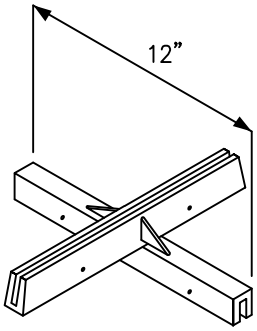

90 DEGREE CROSSPIECE 12"
(Use this mount)

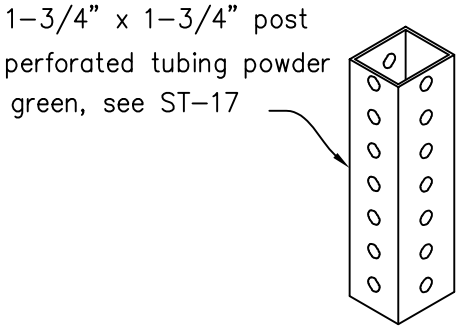

POST

NOTES:

1. Reflective sheeting material 3M DG3 4090 white.
   Electro cut film 3M 1177c green reserve weed.
2. See ST–17 for pole installation.
3. Bottom of lowest sign on post to be 8'–0" min. above finish grade, and bottom of lowest sign on street light to be 10'–0" above finished grade.
4. Signs shall be installed 18" behind face of curb or 6" behind 5' monolithic sidewalk.
5. Block number to denote highest address number adjacent to intersection by hundreds (or by tens if applicable).
6. Arrow to point in direction of increase in address. Omit arrow if the street does not continue in the direction of increase.
7. The size of the street name sign blank depends on how many letters are in the name:

24" x 9 "	1–5 letters
30" x 9 "	6–8 letters
36" x 9 "	9–12 letters
42" x 9 "	13+ letters

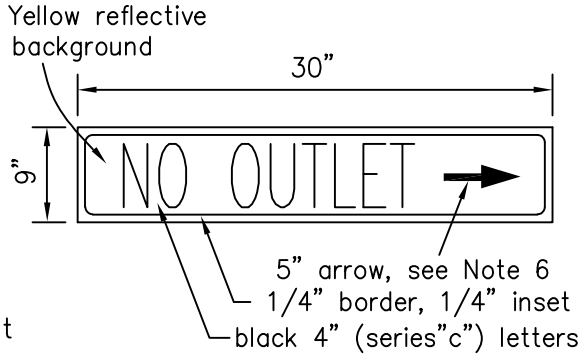

W14–2a SPECIAL
W14–2a (Rt) SPECIAL SHOWN

User note:
These details shall be used in conjunction with all the City standard details and specifications. Refer to the City standard specifications for the materials, installation, testing, protective coatings, and other requirements.

Date	By	Rev.

STREET NAME SIGN (DOWNTOWN CORE) AND W14–2a SPECIAL SIGN

CITY OF LIVERMORE
STANDARD DETAIL

Dwn: KY/KR/HI	Date: Apr–23	NO.
Ckd: Spec. Committee	Scale: NONE	ST–18B

City Engineer

ST18.DWG

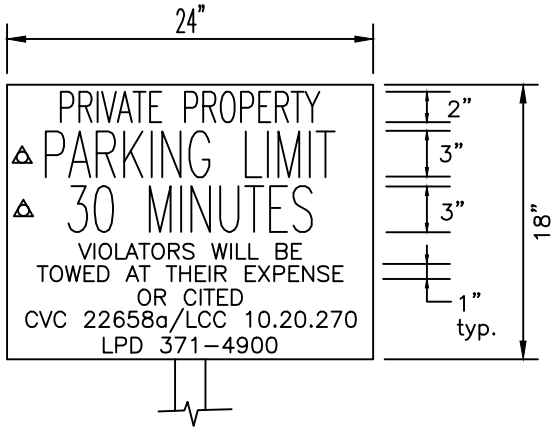

SIGN A

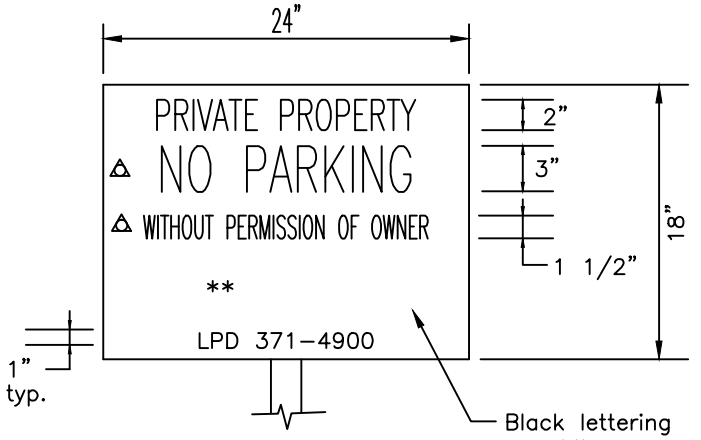

SIGN B

** Both codes may be used together (see above example) or individually:
" VIOLATORS WILL BE TOWED AT THEIR EXPENSE CVC 22658a "
" VIOLATORS WILL BE CITED LCC 10.20.270 ".

Additional signs may be installed within the parking area with approval of the Planning Department.

△ Message may vary (TIME LIMIT, CUSTOMERS ONLY, etc.) with approval of the Police Department.

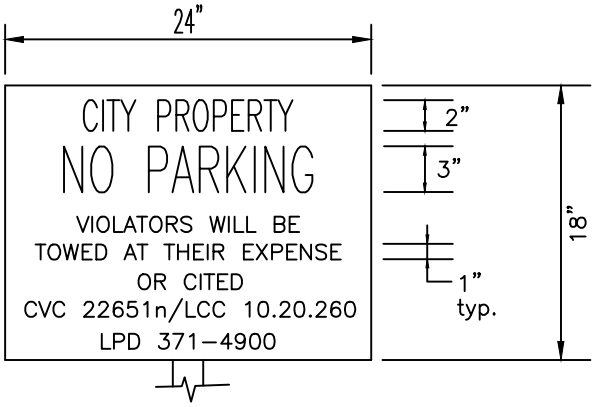

SIGN C

NOTES:

1. For enforcement of public traffic regulations and control see ST-20B.
2. Private Property signs to be purchased, installed and maintained at no cost to the City.
3. Private Property signs to be installed at each entrance to the subject private property outside of the public right-of-way.
4. City off-street signs on City property shall use square steel tubing poles per ST-17.
5. Optional wording : " VIOLATORS WILL BE CITED/TOWED AT THEIR EXPENSE "

User note:
These details shall be used in conjunction with all the City standard details and specifications. Refer to the City standard specifications for the materials, installation, testing, protective coatings, and other requirements.

Date	By	Rev.

PRIVATE PROPERTY/ CITY OFF-STREET SIGNS

CITY OF LIVERMORE
STANDARD DETAIL

Dwn: KY	Date: May-13	NO.
Ckd: Spec. Committee	Scale: NONE	ST-20A

City Engineer

ST20A.DWG

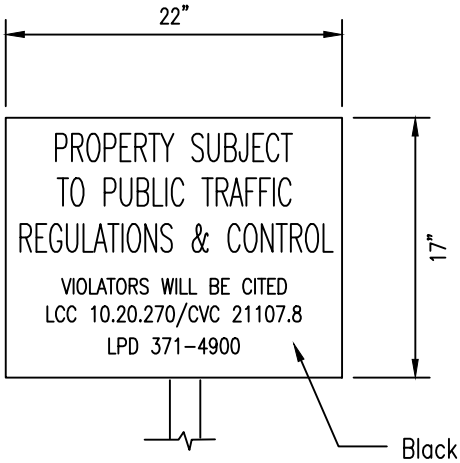

SIGN D

Black lettering on white background, also see Note 1

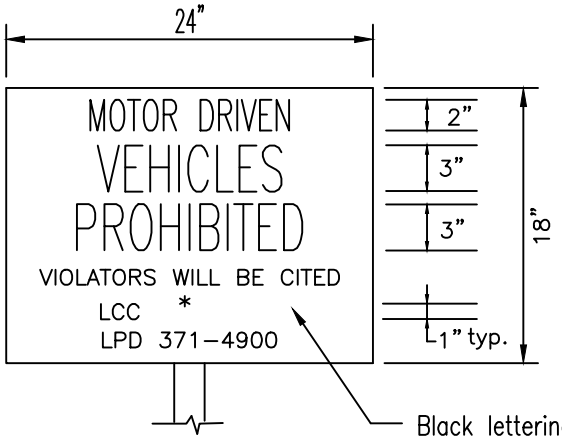

Black lettering on white background

* 10.20.270 for private property
10.28.070 for public property

SIGN E

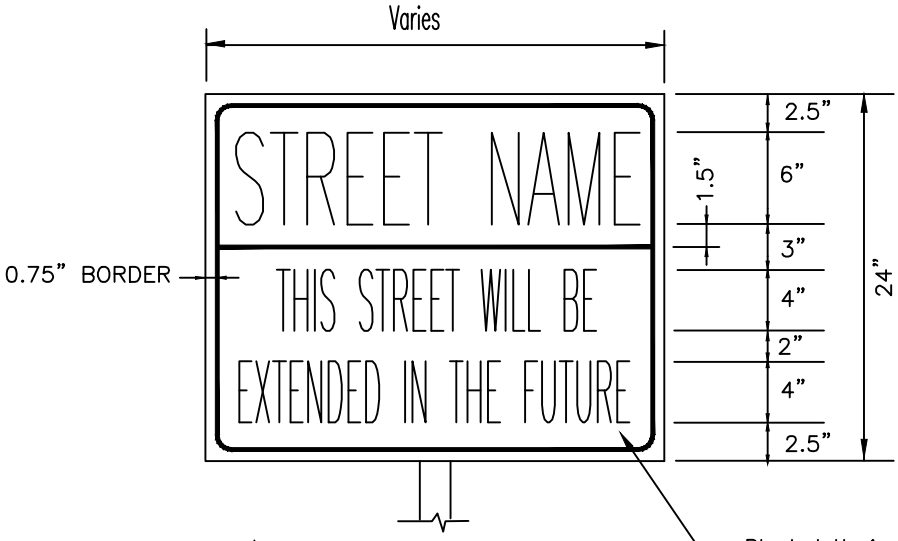

* See Note 4

Black lettering on white background

SIGN F

NOTES:

1. The following apply to Sign D :
   a. These signs must be posted for enforcement of public traffic regulations and control.
   b. Signs may be posted alone or with Parking Limit signs, see ST-20A
2. Minimum letter size 1" .
3. See ST-20A for additional notes.
4. Sign F to be installed at end of stubbed streets which are to be extended in the future.

User note:
These details shall be used in conjunction with all the City standard details and specifications. Refer to the City standard specifications for the materials, installation, testing, protective coatings, and other requirements.

Date	By	Rev.

ST20B.DWG

PRIVATE PROPERTY/ CITY OFF-STREET SIGNS

CITY OF LIVERMORE
STANDARD DETAIL

Dwn: KY	Date: May-13	NO.
Ckd: Spec. Committee	Scale: NONE	ST-20B

City Engineer

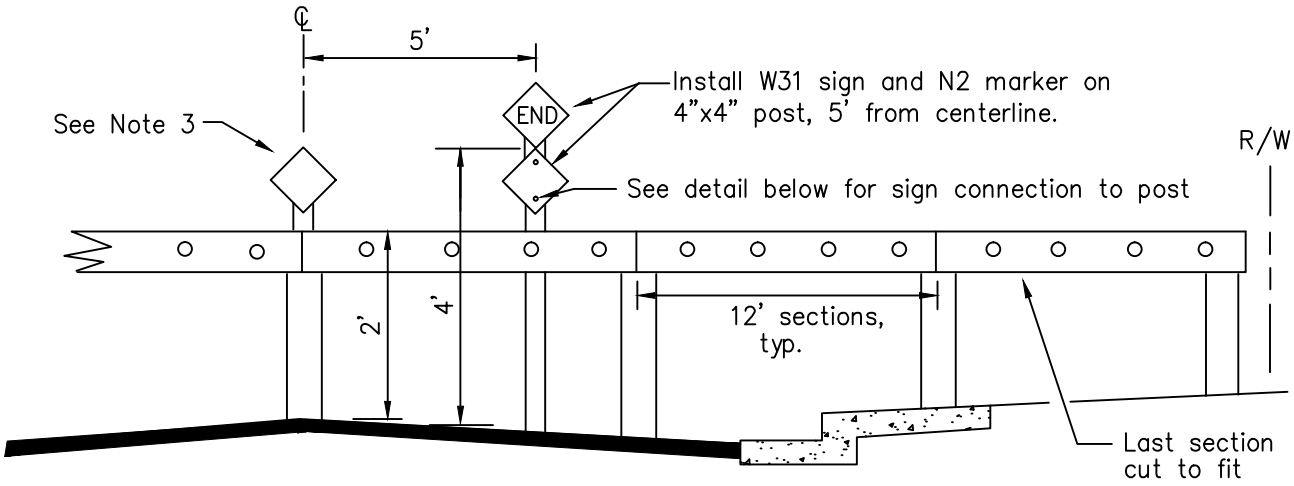

STREET CLOSURE BARRICADE

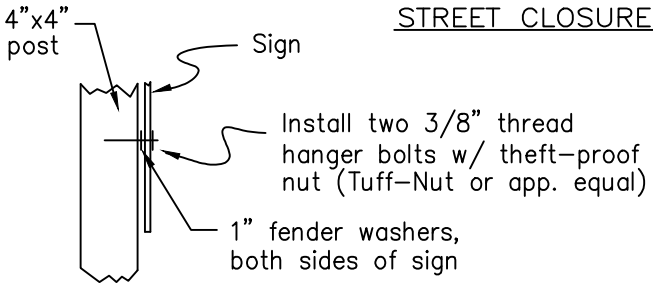

SIGN CONNECTION TO POST

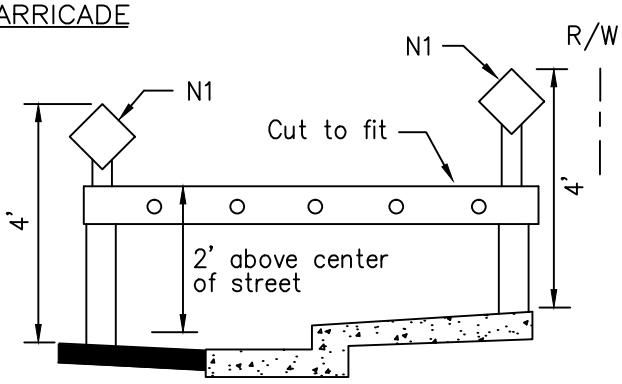

STREET SHOULDER BARRICADE

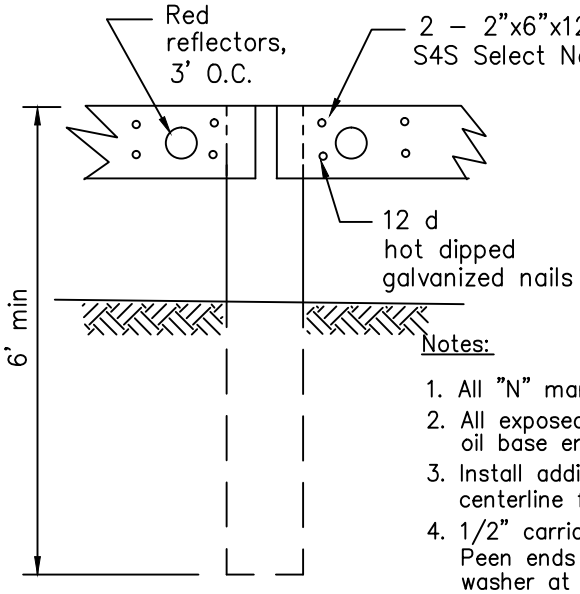

ELEVATION

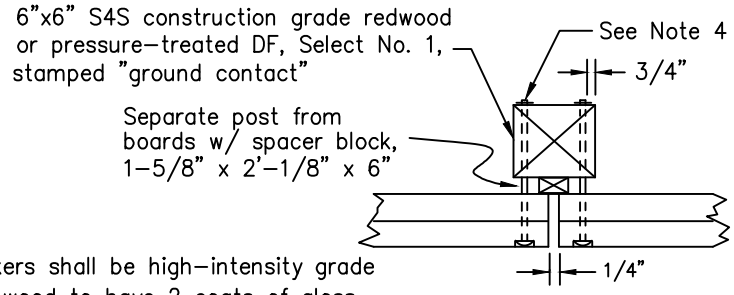

PLAN

Notes:

1. All "N" markers shall be high-intensity grade
2. All exposed wood to have 2 coats of gloss oil base enamel exterior white paint.
3. Install additional N2 markers in line with centerline for streets more than 40' wide.
4. 1/2" carriage bolts, countersunk full depth; Peen ends or use theft-proof nuts; 1/4" washer at nut end.
5. Use Sign F per ST-20B for end of stubbed streets to be extended in the future.

User note:
These details shall be used in conjunction with all the City standard details and specifications. Refer to the City standard specifications for the materials, installation, testing, protective coatings, and other requirements.

Date	By	Rev.

ST21.DWG

BARRICADES

CITY OF LIVERMORE
STANDARD DETAIL

Dwn: KY/KR	Date: May-13	NO.
Ckd: Spec. Committee	Scale: NONE	ST-21

City Engineer

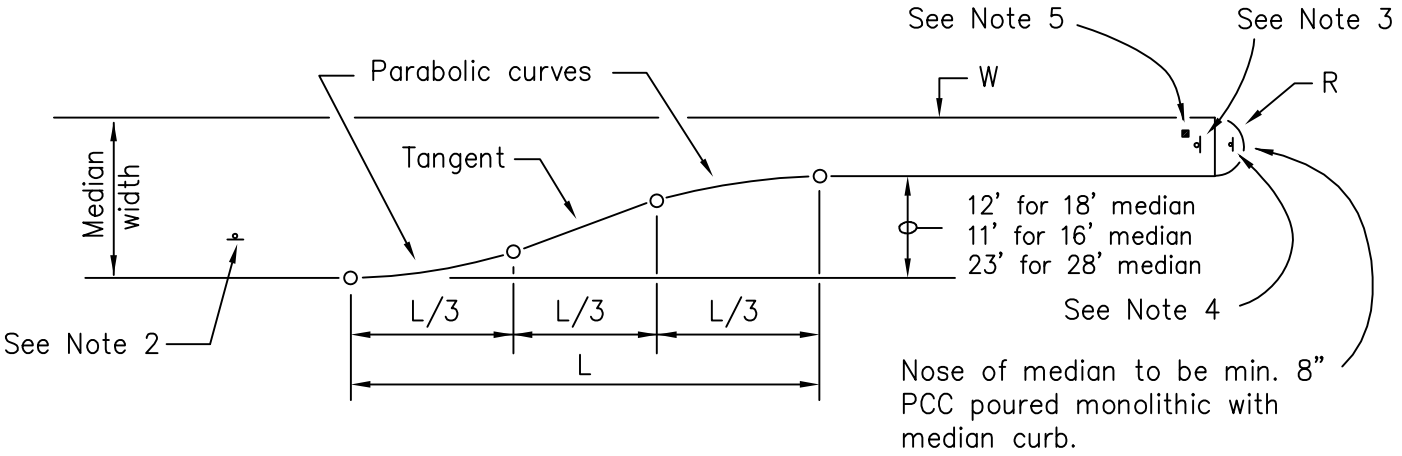

L=length of taper			Offset distance for lane width of...		
60'	90'	120'			
dist. from beg. of taper			10'	11'	12'
5	7.5	10	.16	.17	.19
10	15.0	20	.62	.69	.75
15	22.5	30	1.41	1.55	1.69
20	30.0	40	2.50	2.75	3.00
30	45.0	60	5.00	5.50	6.00
40	60.0	80	7.50	8.25	9.00
45	67.5	90	8.59	9.45	10.31
50	75.0	100	9.38	10.31	11.25
55	82.5	110	9.84	10.83	11.81
60	90.0	120	10.00	11.00	12.00

median width	W	R
16'	5'	2.5'
18'	6'	3'
28'	5'	2.5'

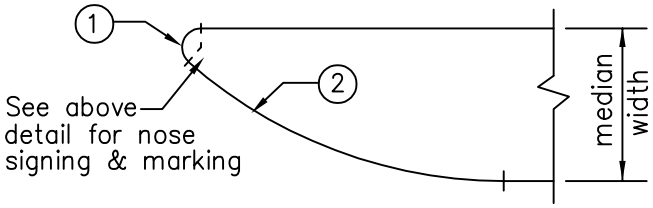

MEDIAN WIDTH	CURVE # 1 DATA			CURVE # 2 DATA		
	R	DELTA	L	R	DELTA	L
16'	2'	138° 35' 25"	4.84'	50'	41° 24' 35"	36.14'
18'	2'	139° 43' 28"	4.87'	60'	40° 34' 02"	42.48'
28'	4'	134° 11' 04"	9.38'	70'	45° 48' 56"	55.79'

Notes

1. See Notes 3, 4, and 5
2. R= Radius; Delta= internal angle; L= Length of curve
3. In the presence of roadway features, such as curves, which would affect the layout of the median, see the drawing for layout data.

MEDIAN NOSE OPPOSITE A LEFT TURN LANE

NOTES:

1. See ST-2A thru ST-2C for street widths, ST-9B for median curb, and ST-17 for roadside sign/pole installation.
2. Install R6-1 (rt) opposite driveways as directed by the Engineer.
3. Install R4-7 ; bottom of sign 5' above median surface, 4' from nose of median, as directed by the Engineer.
4. Install Type K reflector, with 8" anchor, 18" from nose of median. Paint nose w/ reflective yellow paint, as directed by the Engineer.
5. All boxes installed in nose of median to be 5' from end of PCC concrete nose.

User note:
These details shall be used in conjunction with all the City standard details and specifications. Refer to the City standard specifications for the materials, installation, testing, protective coatings, and other requirements.

Date	By	Rev.

MEDIAN CONSTRUCTION

CITY OF LIVERMORE
STANDARD DETAIL

Dwn: KY/KR/HI	Date: Apr-23	NO.
Ckd: Spec. Committee	Scale: NONE	ST-22

City Engineer

ST22.DWG

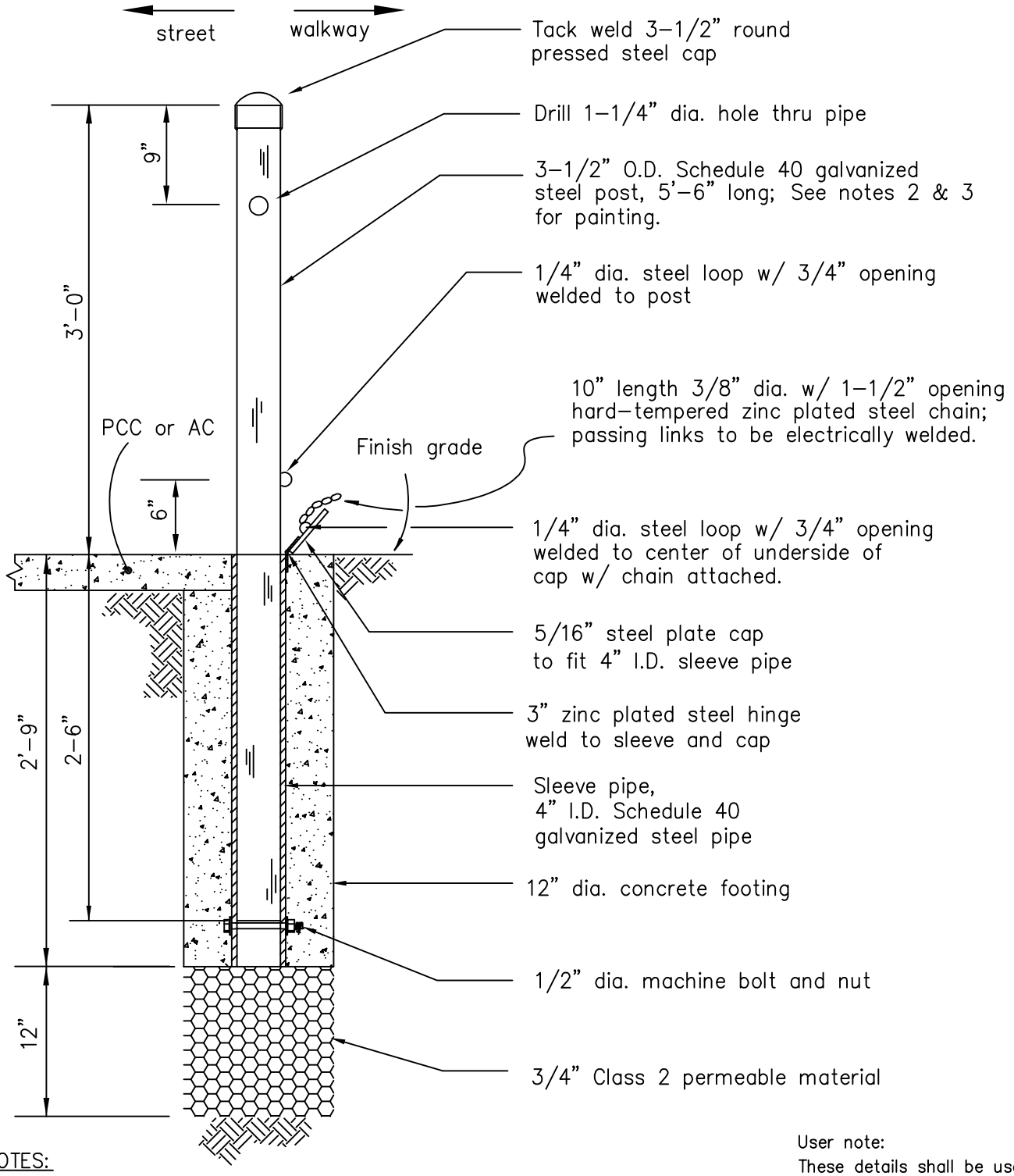

NOTES:

1. Locate all underground utilities prior to excavating post footing.
2. Prime all metal with one coat of galvanize–compatible primer and two coats of white industrial enamel.
3. Apply two 3" wide strips of reflectorized yellow tape. Provide a 3" gap between each strip.

User note:
These details shall be used in conjunction with all the City standard details and specifications. Refer to the City standard specifications for the materials, installation, testing, protective coatings, and other requirements.

Date	By	Rev.

REMOVABLE BOLLARD

CITY OF LIVERMORE
STANDARD DETAIL

Dwn: KY/KR/HI	Date: Apr–23	NO.
Ckd: Spec. Committee	Scale: NONE	ST–23

City Engineer

ST23.DWG

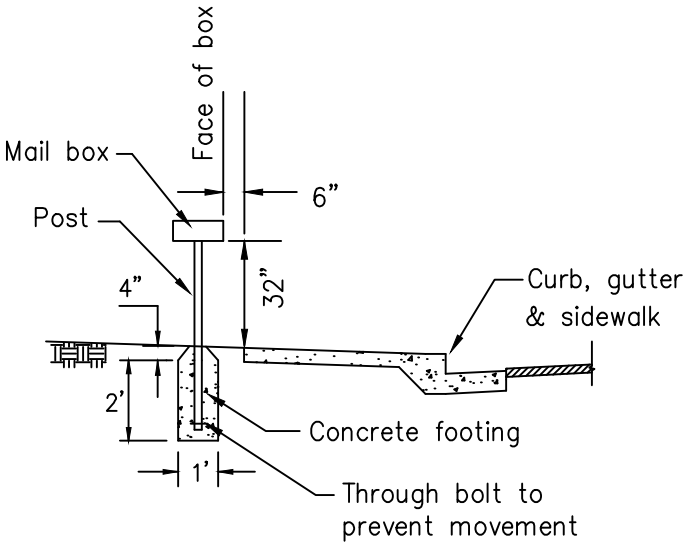

WITH MONOLITHIC SIDEWALK

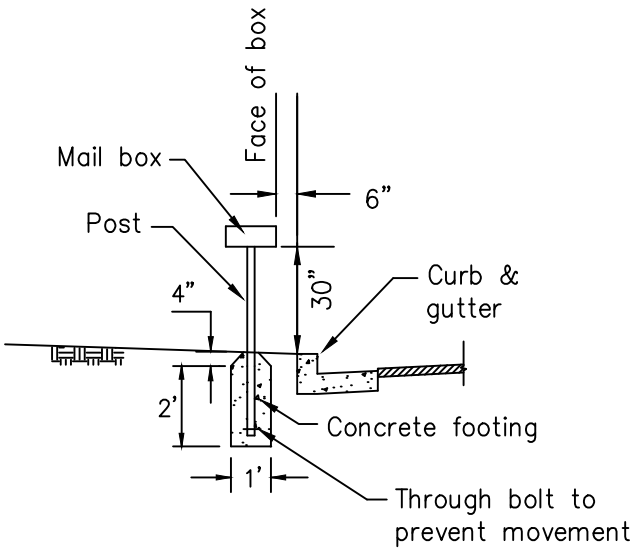

ALL OTHER CASES

NOTES:

1. Residential boxes may be installed on 4"x4" construction Heart S4S Grade wood post set in concrete footing.
2. Residential installation shall be dual or cluster installation. Single box installation allowed only upon approval of Postmaster.
3. Install industrial boxes on 2" diameter steel pipe.
4. Industrial boxes to be installed on side of street without sidewalk, and may be single box installation.
5. Edge of box to be a minimum of :

   5' from poles
   3' from driveways
   10' from curb returns
   5' from fire hydrants in 5' SW
   10' from fire hydrants in 10' SW

6. Location of all boxes subject to approval of Postmaster.

User note:
These details shall be used in conjunction with all the City standard details and specifications. Refer to the City standard specifications for the materials, installation, testing, protective coatings, and other requirements.

Date	By	Rev.

MAIL BOX INSTALLATION

CITY OF LIVERMORE
STANDARD DETAIL

Dwn: KY	Date: May-13	NO.
Ckd: Spec. Committee	Scale: NONE	ST-24

City Engineer

ST24.DWG

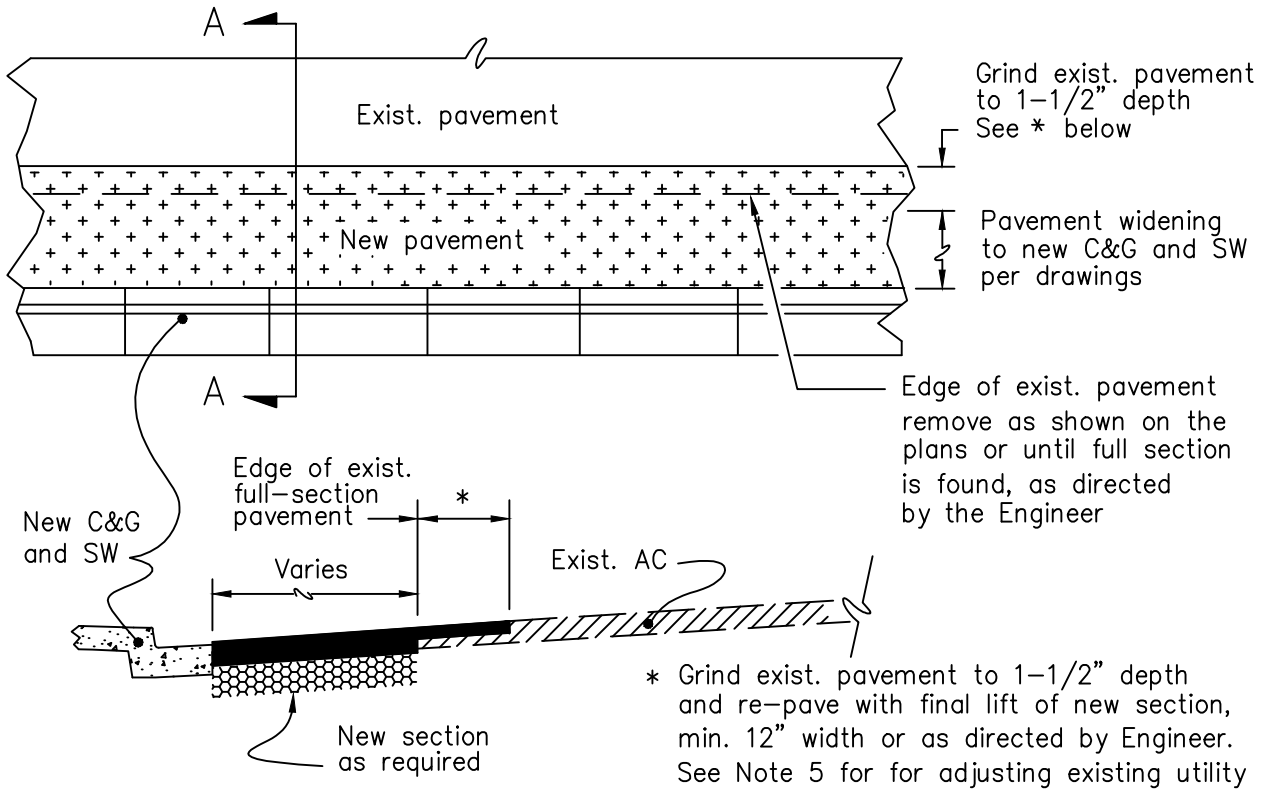

SECTION A-A

PAVEMENT WIDENING

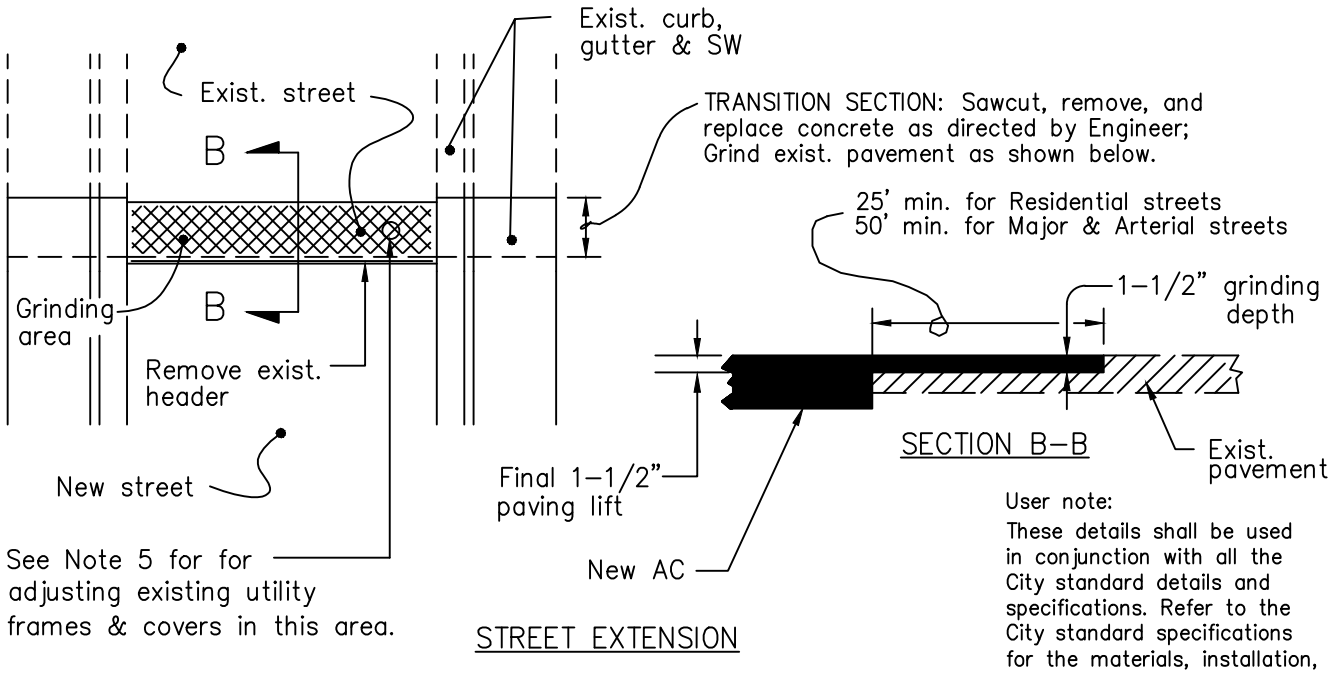

STREET EXTENSION

User note:
These details shall be used in conjunction with all the City standard details and specifications. Refer to the City standard specifications for the materials, installation, testing, protective coatings, and other requirements.

Date	By	Rev.

PAVEMENT WIDENING, CONNECTIONS

CITY OF LIVERMORE
STANDARD DETAIL

Dwn: KY/KR	Date: May-13	NO.
Ckd: Spec. Committee	Scale: NONE	ST-25A

City Engineer

ST25A.DWG

ST25B.DWG

Rev.	By	Date

PAVEMENT OVERLAY

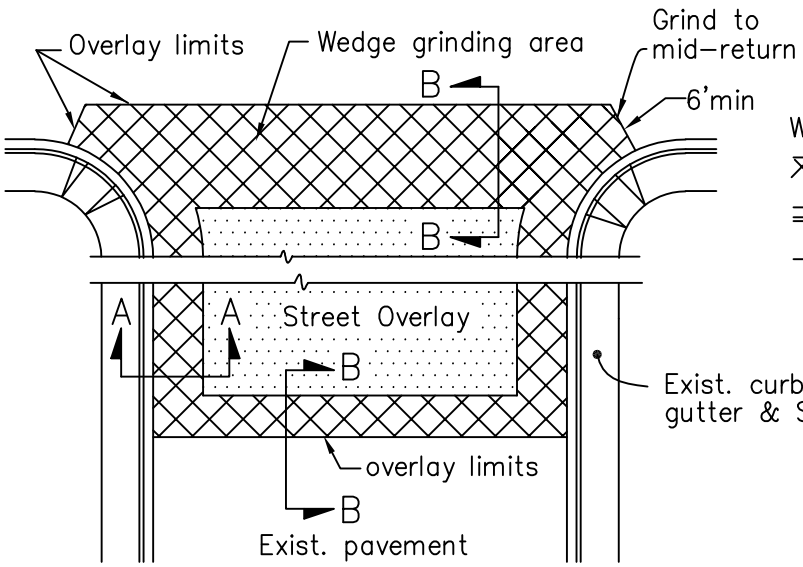

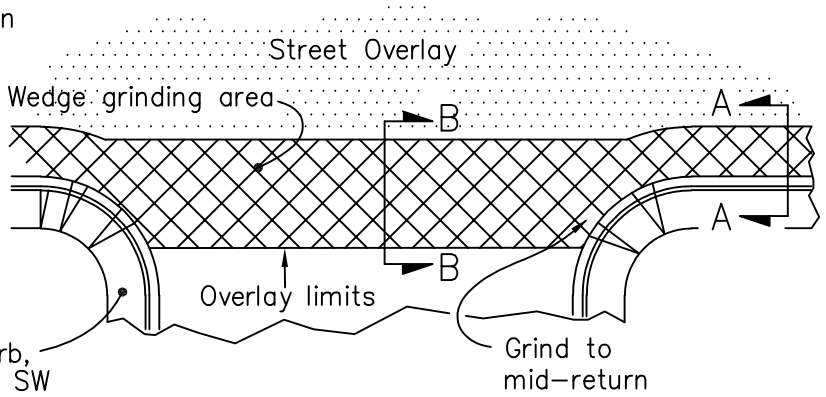

Grinding Detail at Intersections

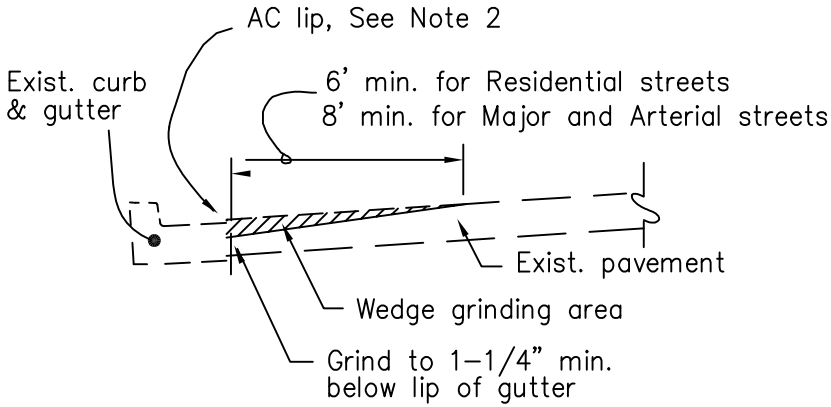

SECTION A-A

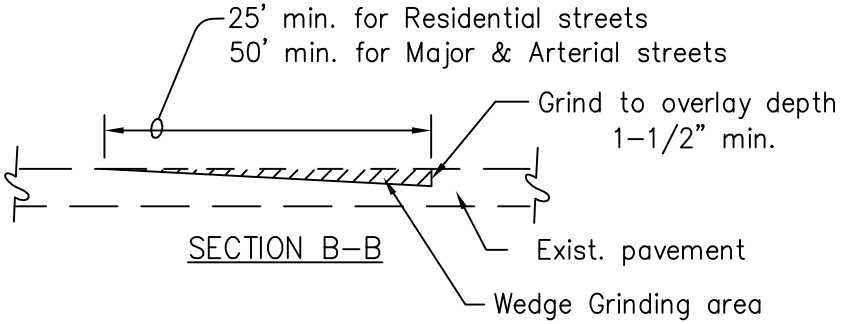

SECTION B-B

User note:
These details shall be used in conjunction with all the City standard details and specifications. Refer to the City standard specifications for the materials, installation, testing, protective coatings, and other requirements.

Notes:

1. Wedge grinding shall taper from depth specified to 0".
2. Place AC at gutter to 1/4" above lip.
3. At curb with no gutter, grind to 2" depth at face of curb and pave to grades specified by Engineer in field.
4. Break overlay at grinding so that min. 1-1/4" thickness is achieved.
5. In conform and grinding areas, existing utility and monument frames and covers shall be lowered first before grinding and then raised to finished grade after paving.
6. Wedge grinding shall be extended in front of new curb ramp and curb & gutter reconstruction.

CITY OF LIVERMORE
STANDARD DETAIL

Dwn: KY/KR/HI | Date: Sept-22
Ckd: Spec. Committee | Scale: NONE

City Engineer

NO. ST-25B

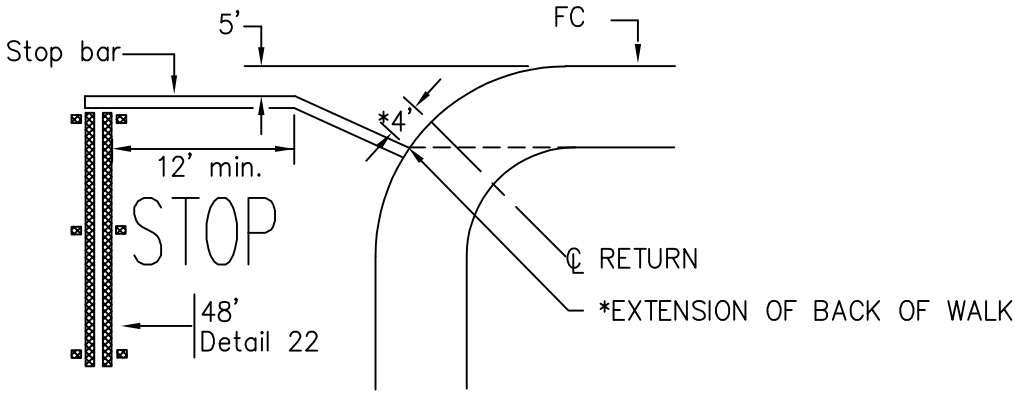

STOP BAR AT INTERSECTION

NO ACCESS RAMP

* STOP BAR SHALL ANGLE TO GUTTER EITHER AT 4' FROM ℄ OF RETURN OR AT EXTENSION OF BACK OF WALK, WHICHEVER IS GREATER.

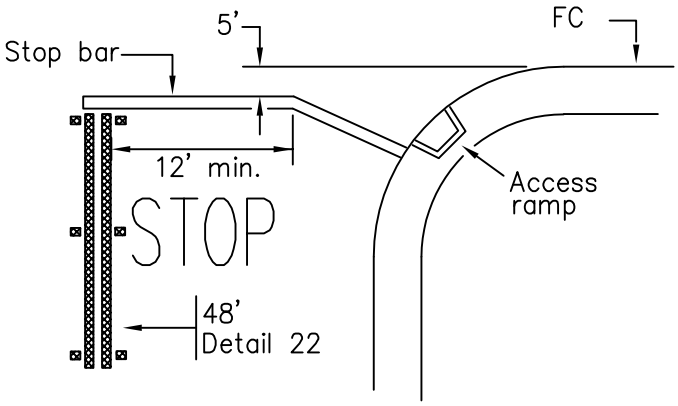

STOP BAR AT INTERSECTION

W/ ACCESS RAMP

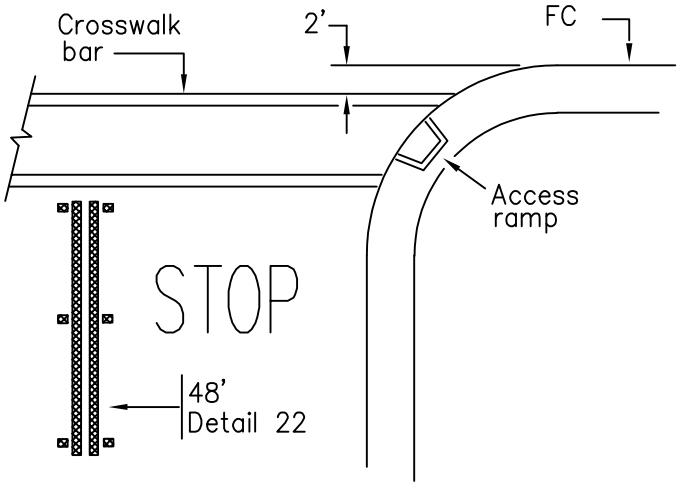

CROSSWALK

User note:
These details shall be used in conjunction with all the City standard details and specifications. Refer to the City standard specifications for the materials, installation, testing, protective coatings, and other requirements.

Date	By	Rev.

CROSSWALK/STOP BAR INSTALLATION

CITY OF LIVERMORE
STANDARD DETAIL

Dwn: KY/KR/HI	Date: Sept-22	NO.
Ckd: Spec. Committee	Scale: NONE	ST-26

City Engineer

ST26.DWG

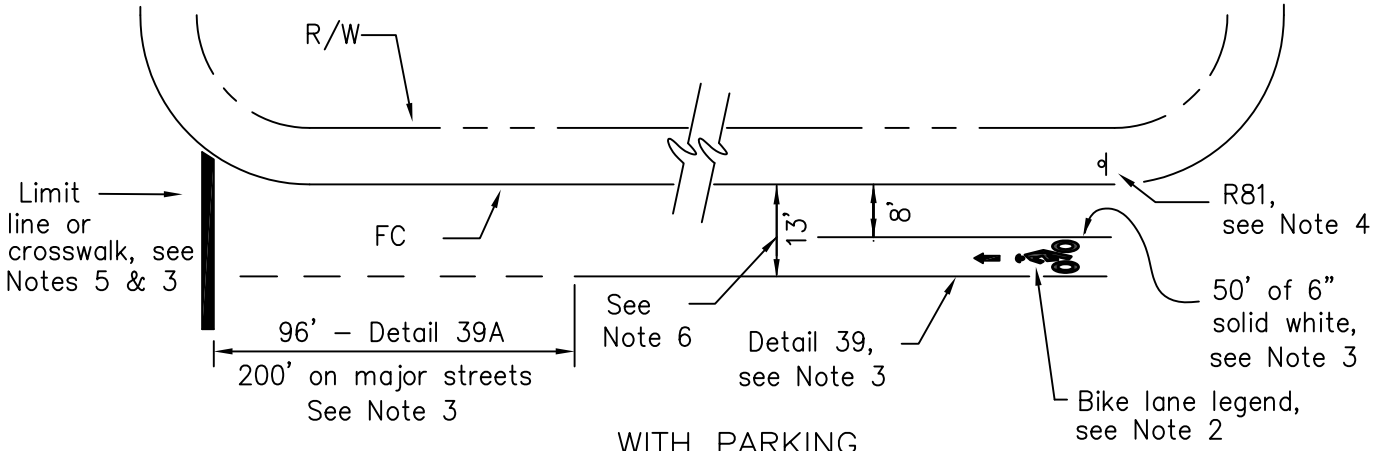

WITH PARKING

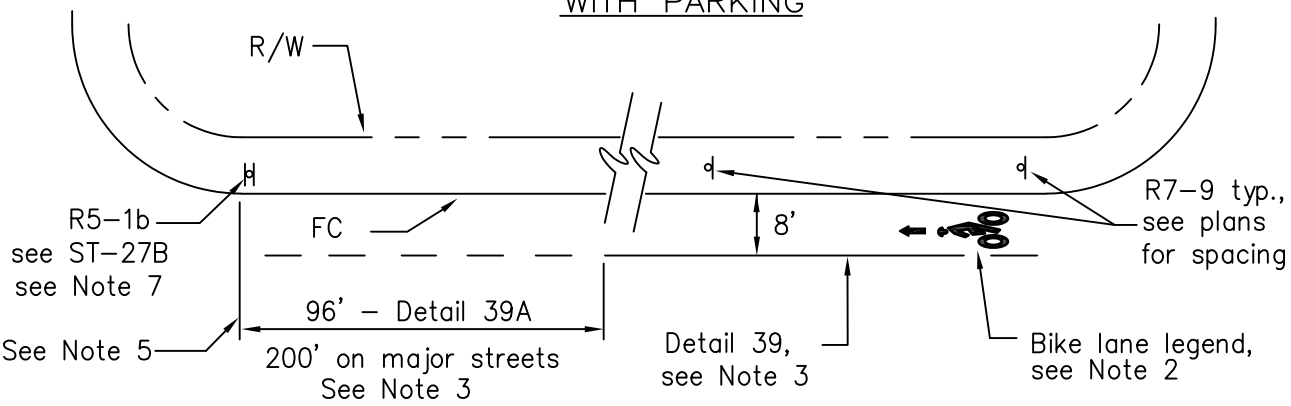

WITHOUT PARKING

NOTES:

1. See Detail ST–17 for sign pole installation.
2. Bike Lane legend shall be per Caltrans Standard Plans A24A "Bike Lane Arrow", and A24C "Bike Lane Symbol with Person". Bike lane legends shall be installed using a specialized crushed glass thermoplastic composition per the specifications.
3. All striping to be white thermoplastic.
4. Install 12"x8" R81 signs at the beginning of bike lane at all major street intersections and at 1/2 mile maximum spacing. Install legends at the beginning of the bike lane at all intersections and 1/2 mile maximum spacing.
5. At crosswalk or limit line, extend Detail 39A to line; otherwise terminate at curb return.
6. Parking plus Bike Lane width may be reduced to 12' in special cases, if approved by the Engineer.
7. On major streets, install R5–1b back to back with the last R7–9 on each block.

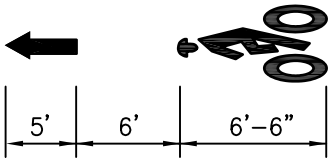

BIKE LEGEND DETAIL

Legend type	Legend area
	7 SF
	7 SF
total:	14 SF

User note:
These details shall be used in conjunction with all the City standard details and specifications. Refer to the City standard specifications for the materials, installation, testing, protective coatings, and other requirements.

Date	By	Rev.

BIKE LANES

CITY OF LIVERMORE
STANDARD DETAIL

Dwn: KY/KR/JV/HI	Date: Sept–22	NO.
Ckd: Spec. Committee	Scale: NONE	ST–27

City Engineer

ST27.DWG

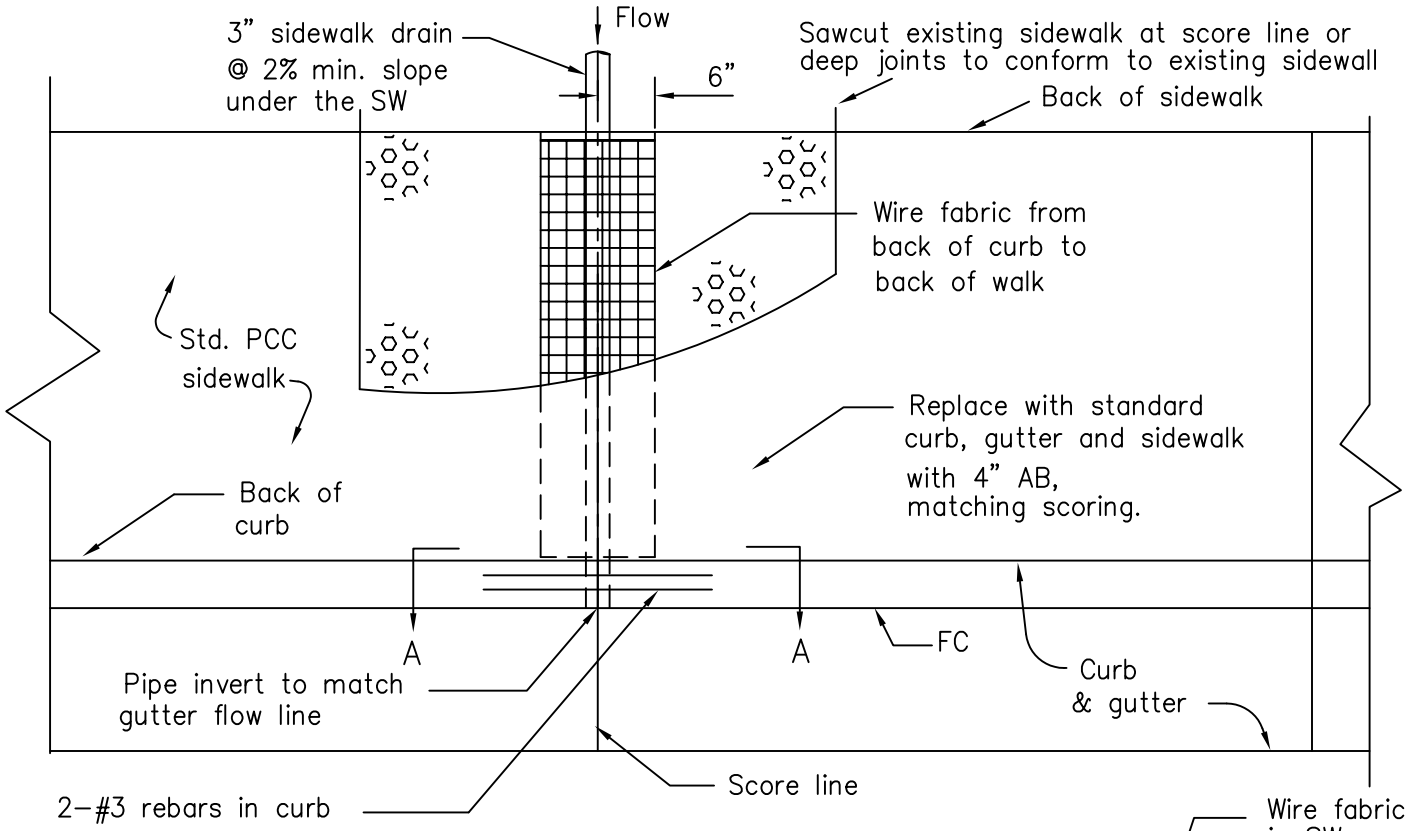

PLAN

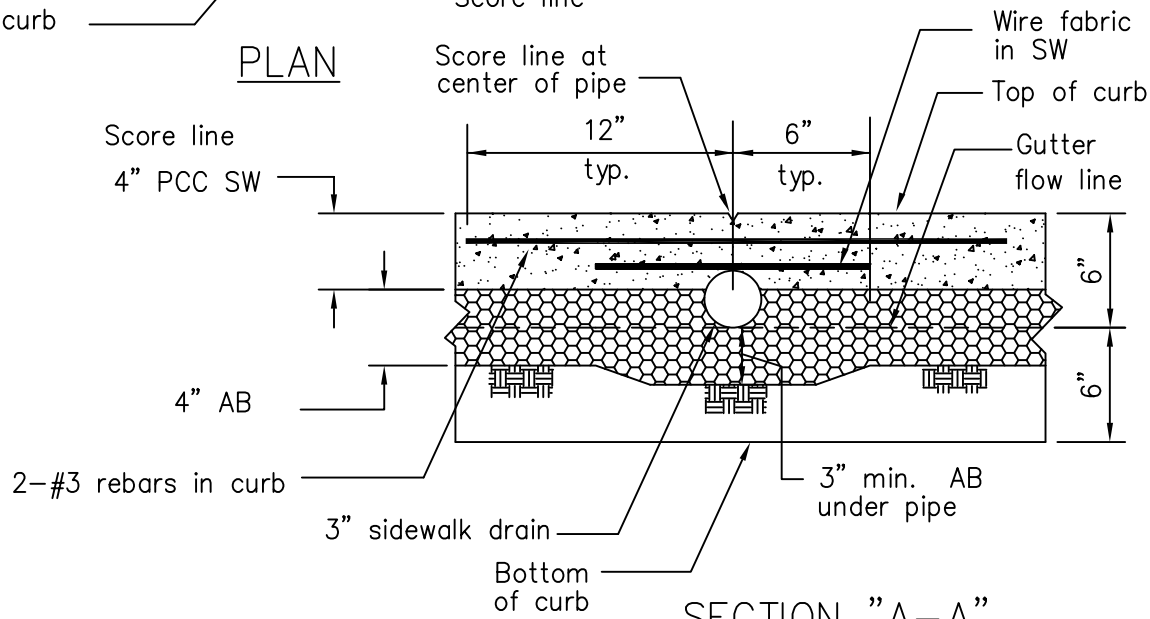

SECTION "A-A"

NOTES:

1. Standard curb, gutter and sidewalk:
   a. See ST-3, 4, & 5 for sidewalks.
   b. See ST-9A for curb and gutter.
2. Minimum 4" between pipes in multiple installations.
3. Sidewalk drain may not be installed within driveway approach (top of flare) .
4. Sidewalk drain to be perpendicular to face of curb.

User note:
These details shall be used in conjunction with all the City standard details and specifications. Refer to the City standard specifications for the materials, installation, testing, protective coatings, and other requirements.

Date	By	Rev.

SIDEWALK DRAIN

(FOR RESTORATION OF EXISTING FACILTIES)

CITY OF LIVERMORE
STANDARD DETAIL

Dwn: KY/HI	Date: Dec-23	NO.
Ckd: Spec. Committee	Scale: NONE	ST-28

City Engineer

ST28.DWG

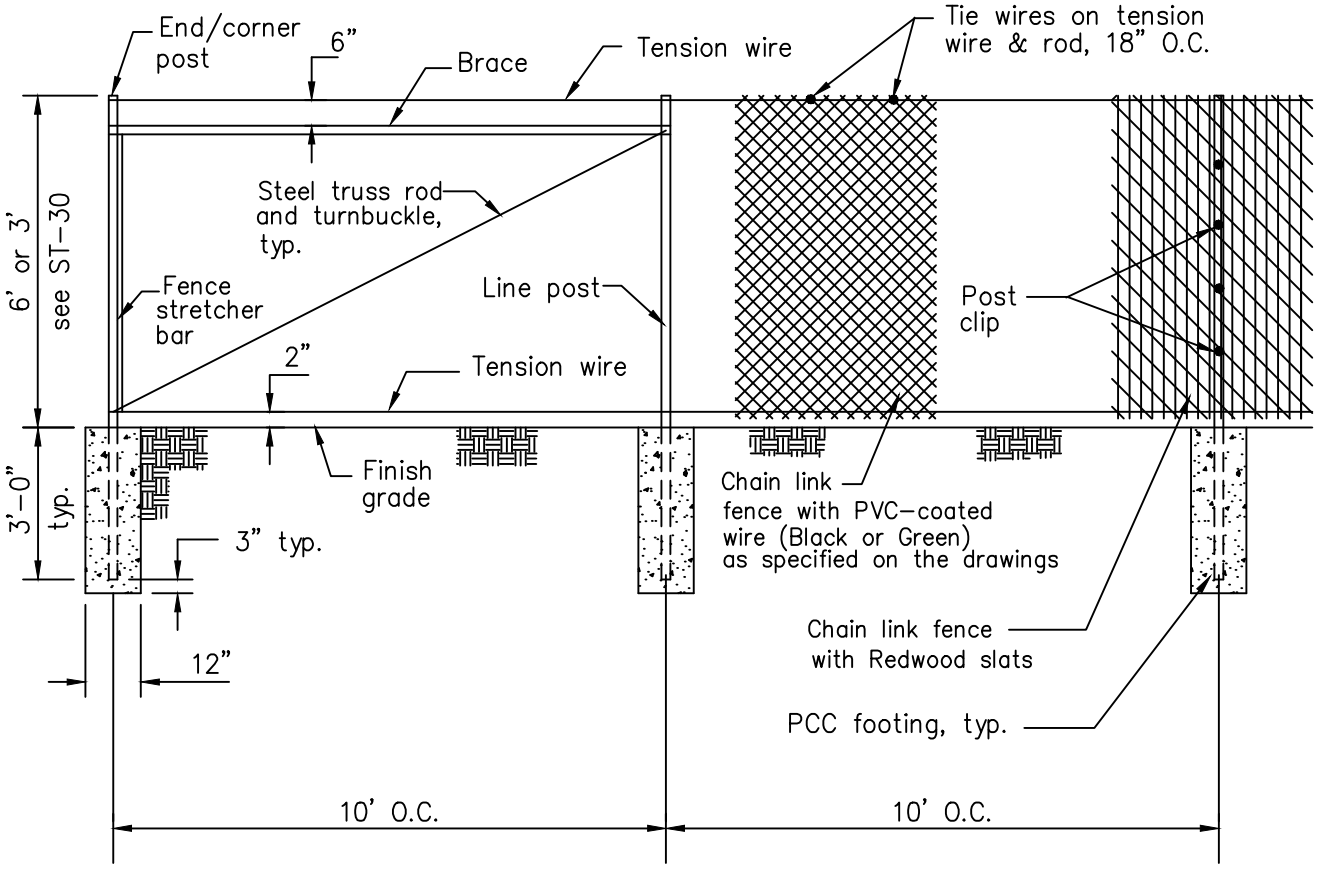

NOTE:

See ST-30 for Pedestrian Walkway fence height and setback requirements.

User note:
These details shall be used in conjunction with all the City standard details and specifications. Refer to the City standard specifications for the materials, installation, testing, protective coatings, and other requirements.

Date	By	Rev.

CHAIN LINK FENCE

CITY OF LIVERMORE
STANDARD DETAIL

Dwn: KY	Date: May-13	NO.
Ckd: Spec. Committee	Scale: NONE	ST-29

City Engineer

ST29.DWG

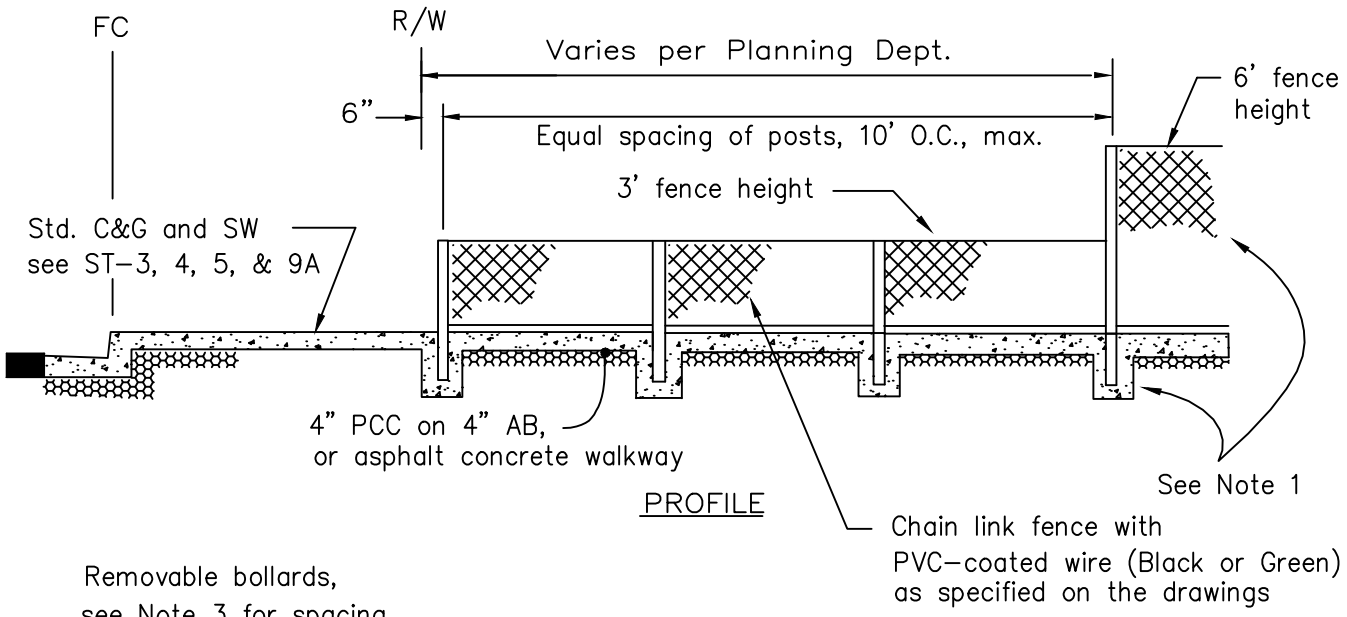

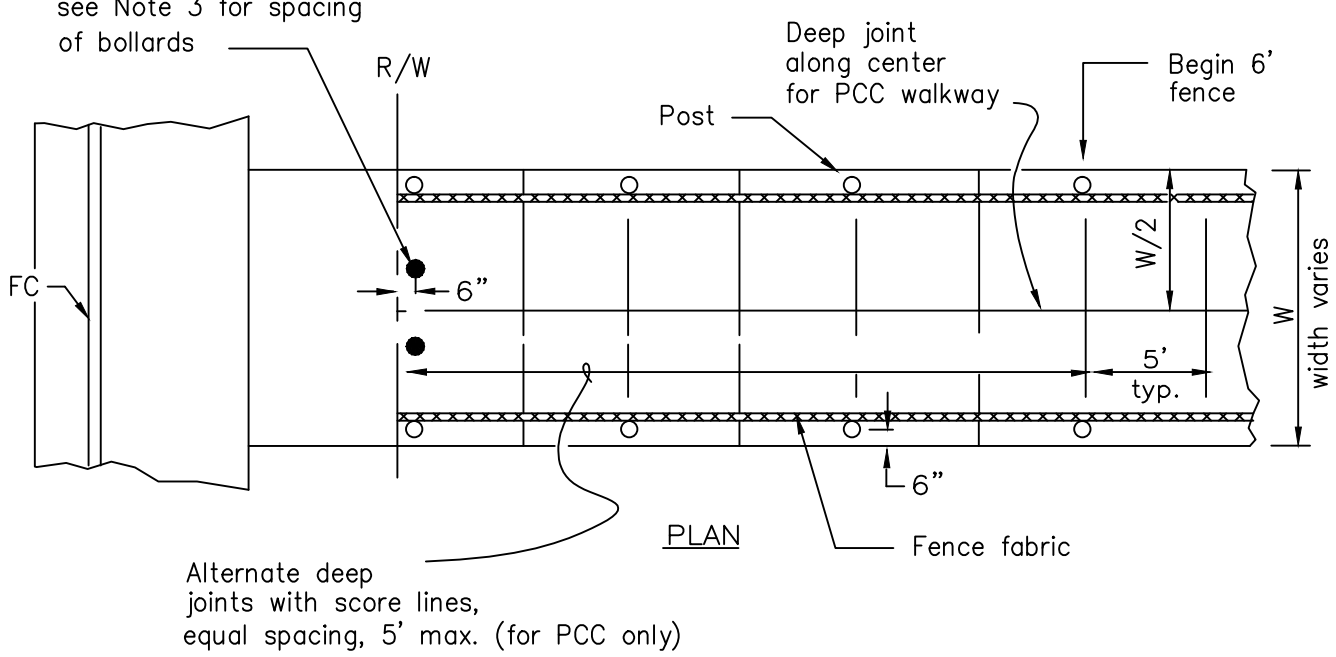

NOTES:

1. See ST-29 for chain link fence and concrete footing details.
2. See ST-23 for removable bollard details.
3. For walkways 10 feet or narrower, install one bollard at 5 feet from one edge of travel path. For walkways wider than 10 feet, install bollards (2 min.) with a 5 feet wide gap at the center of walkway.

User note:
These details shall be used in conjunction with all the City standard details and specifications. Refer to the City standard specifications for the materials, installation, testing, protective coatings, and other requirements.

Date	By	Rev.

ST30.DWG

PEDESTRIAN WALKWAY

CITY OF LIVERMORE
STANDARD DETAIL

Dwn: KY/KR	Date: May-13	NO.
Ckd: Spec. Committee	Scale: NONE	ST-30

City Engineer

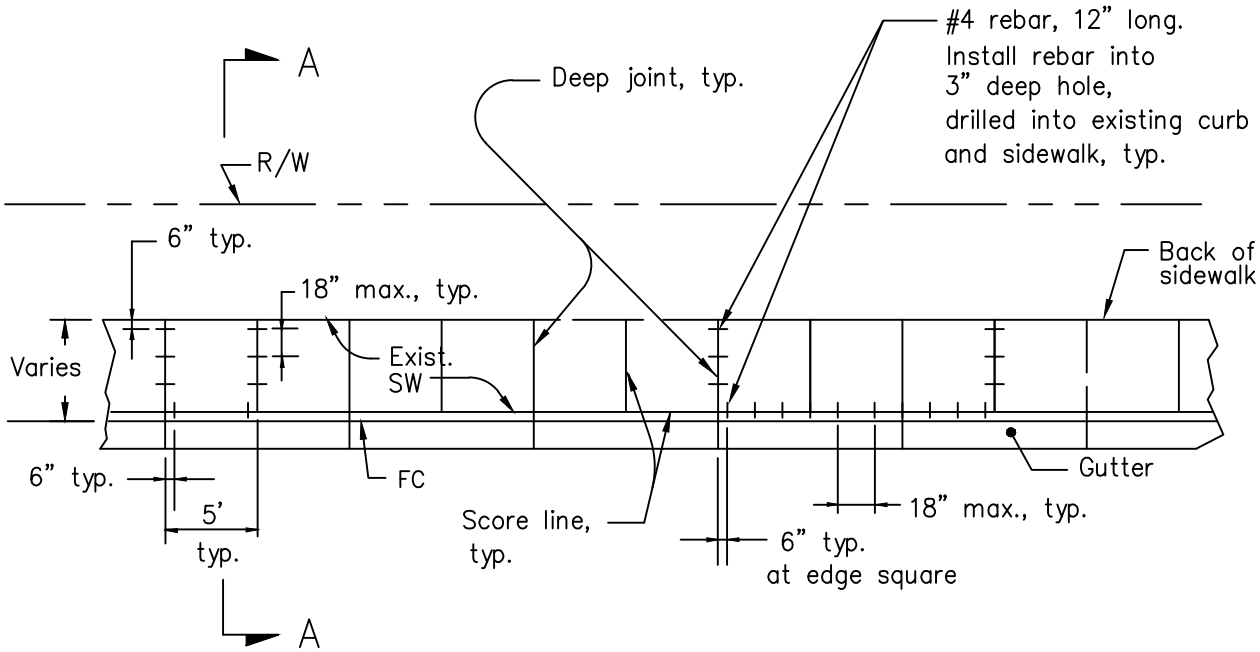

REPLACEMENT OF ONE SQUARE

REPLACEMENT OF TWO OR MORE SQUARES

PLAN

LOCATION FOR SIDEWALK REPLACEMENT

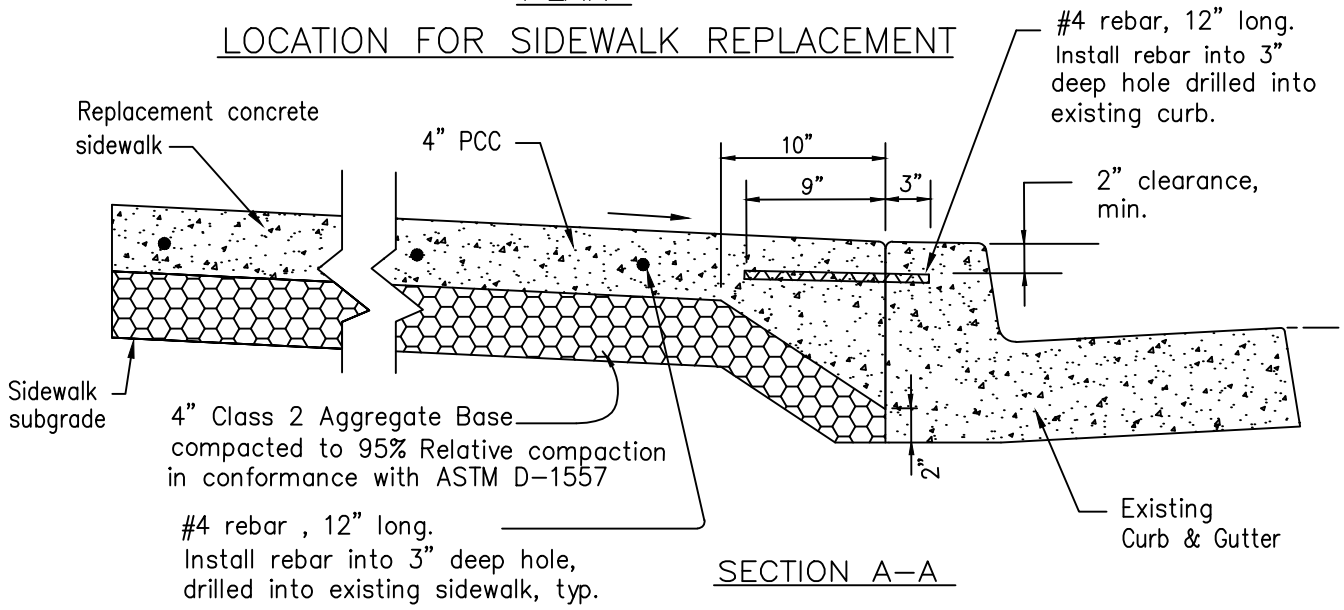

SECTION A–A

NOTES:

1. Match width and scoring pattern with adjacent existing sidewalk.
2. Moist undisturbed native subgrade may not need to be compacted as approved by the City.
3. All exposed corners shall have 1/2" radius.
4. Sawcut existing sidewalk at score line or deep joints to conform to existing sidewalk.
5. The concrete shall have a minimum 28 day compressive strength of 3000 psi. Lampblack shall be added at a rate of 3/4 pound/pint per cubic yard of concrete.

User note:
These details shall be used in conjunction with all the City standard details and specifications. Refer to the City standard specifications for the materials, installation, testing, protective coatings, and other requirements.

Date	By	Rev.

ST31.DWG

SIDEWALK REPAIR

CITY OF LIVERMORE
STANDARD DETAIL

Dwn: KY	Date: May–13	NO.
Ckd: Spec. Committee	Scale: NONE	ST–31

City Engineer

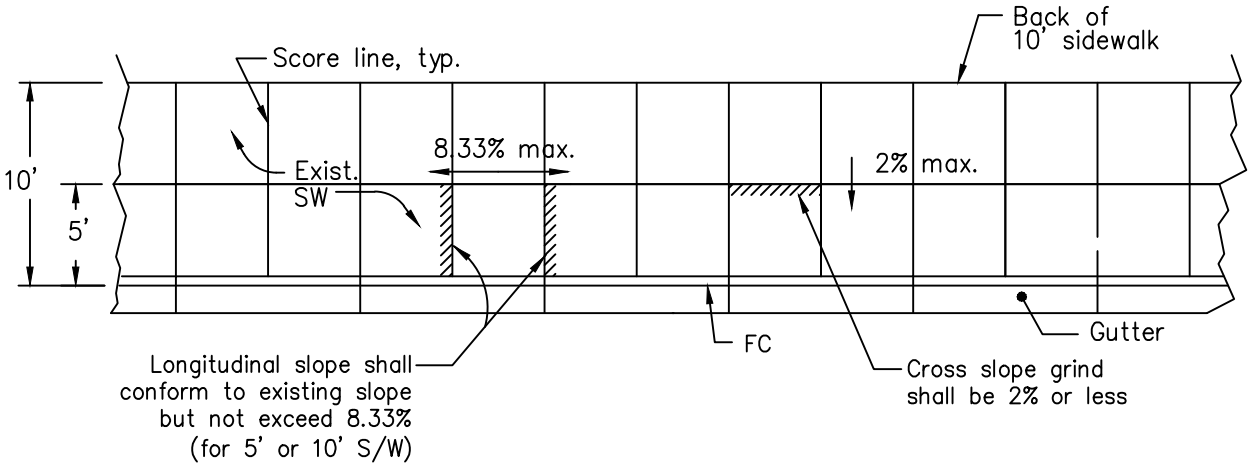

PLAN

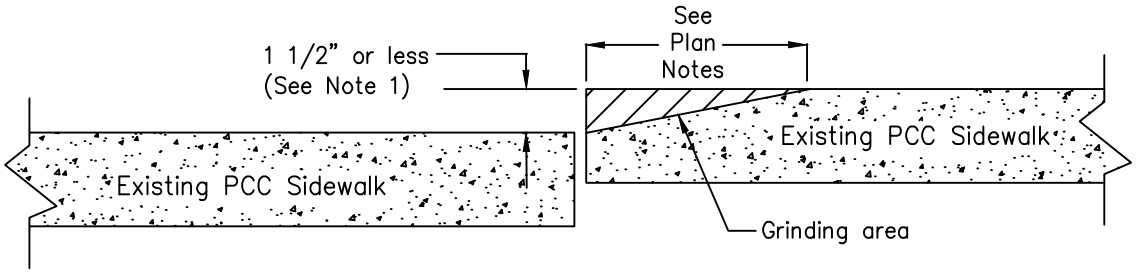

TYPICAL SECTION

User note:
These details shall be used in conjunction with all the City standard details and specifications. Refer to the City standard specifications for the materials, installation, testing, protective coatings, and other requirements.

NOTE:

1. If separation is greater than 1 $\frac{1}{2}$" then sidewalk is to be removed and replaced per City Standard Detail ST–31.

Date	By	Rev.

SIDEWALK GRINDING REPAIR

CITY OF LIVERMORE
STANDARD DETAIL

Dwn: MJT	Date: May–13	NO.
Ckd: Spec. Committee	Scale: NONE	ST–32

City Engineer

ST31.DWG

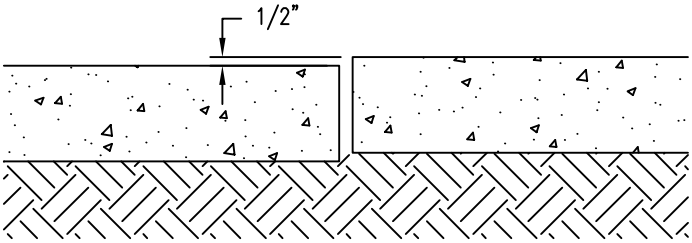

STEP SEPARATIONS A sidewalk panel has been lifted or subsided by 1/2" or more than the adjacent panel.

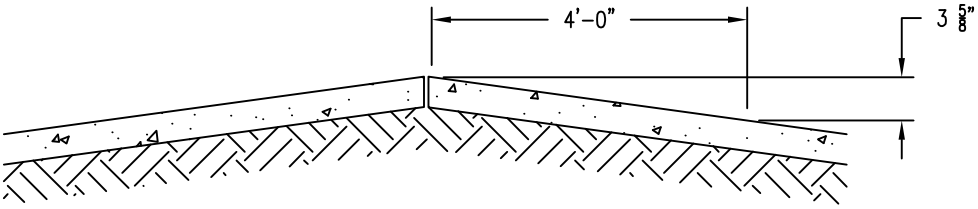

TRANSVERSE GRADE CHANGE Two sidewalk panels have been lifted to a peak, where the peak is 3 5/8" (7.5%) or higher than the normal grade of the sidewalk 4' away in each direction.

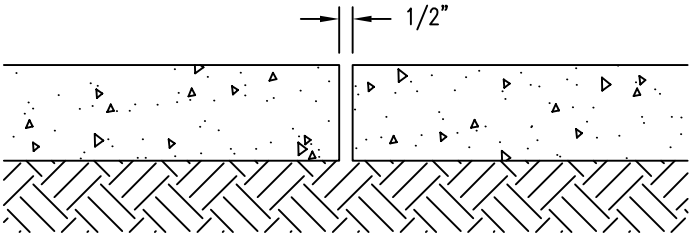

OPENING IN SIDEWALK There is an opening in the sidewalk measuring 1/2" or greater.

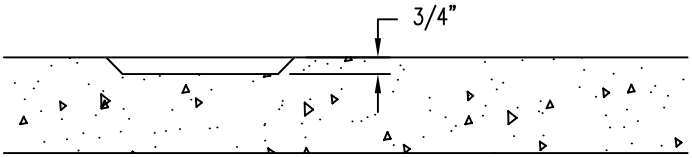

SPALLING OF SURFACE A portion of the sidewalk has been removed, and the result is a hole of 3/4" or deeper.

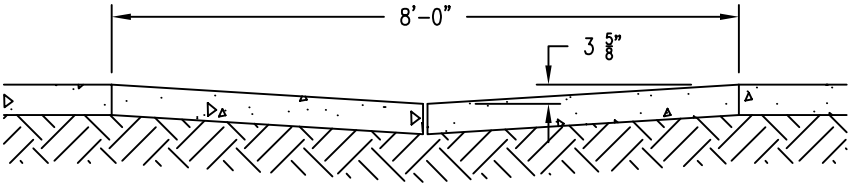

SUNKEN SIDEWALK The sidewalk has subsided within a stretch of 8 feet of sidewalk while there is a portion that is greater than or equal to 3 5/8" (7.5%) lower than the rest of the sidewalk.

NOTE: CROSS SLOPE REQUIREMENT=2%

Date	By	Rev.

SIDEWALK REPAIR CRITERION

CITY OF LIVERMORE
STANDARD DETAIL

Dwn: BC	Date: Oct-18	NO.
Ckd: Spec. Committee	Scale: NONE	ST-33

City Engineer

ST33.DWG

PAVEMENT MARKINGS FOR SPEED LUMPS DETAIL:

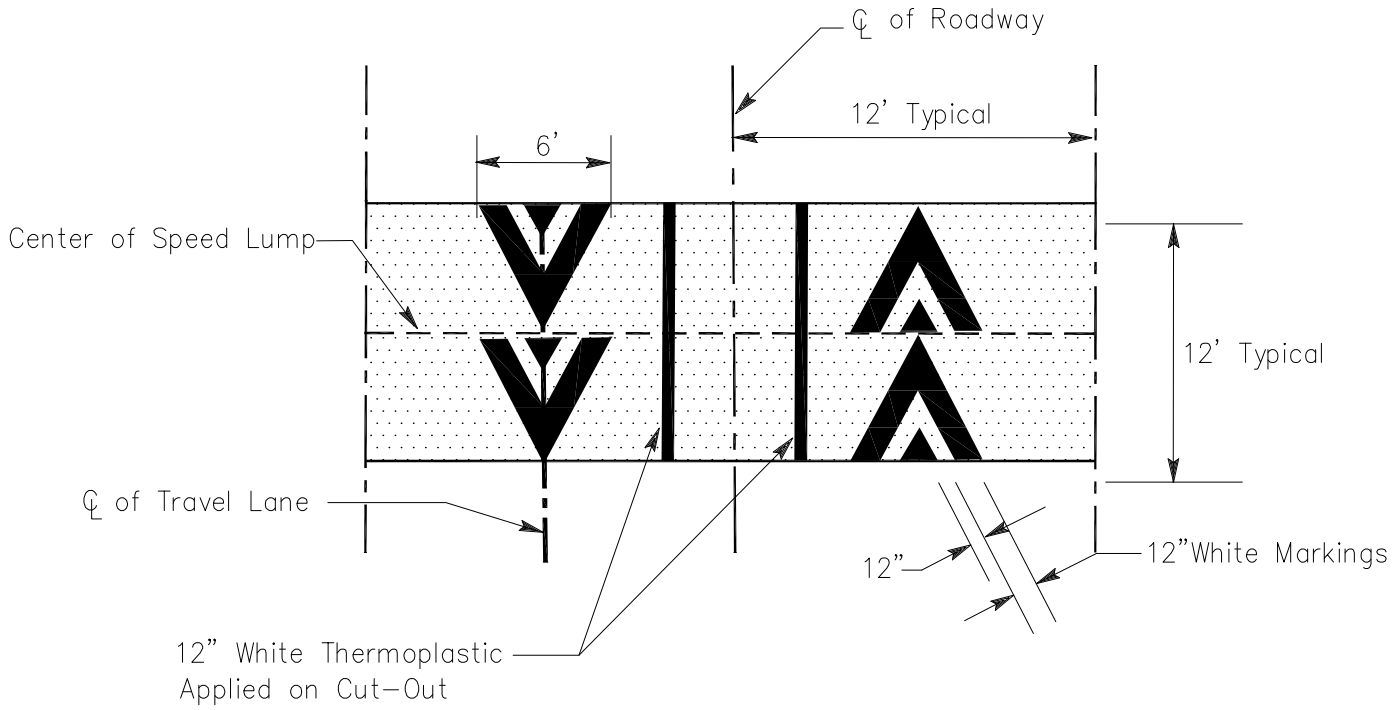

User note:
These details shall be used in conjunction with all the City standard details and specifications. Refer to the City standard specifications for the materials, installation, testing, protective coatings, and other requirements.

Date	By	Rev.

SPEED LUMPS

CITY OF LIVERMORE
STANDARD DETAIL

Dwn: KY/KR/JV/HI	Date: Sept-22	NO.
Ckd: Spec. Committee	Scale: NONE	ST-34

City Engineer

ST-34.DWG

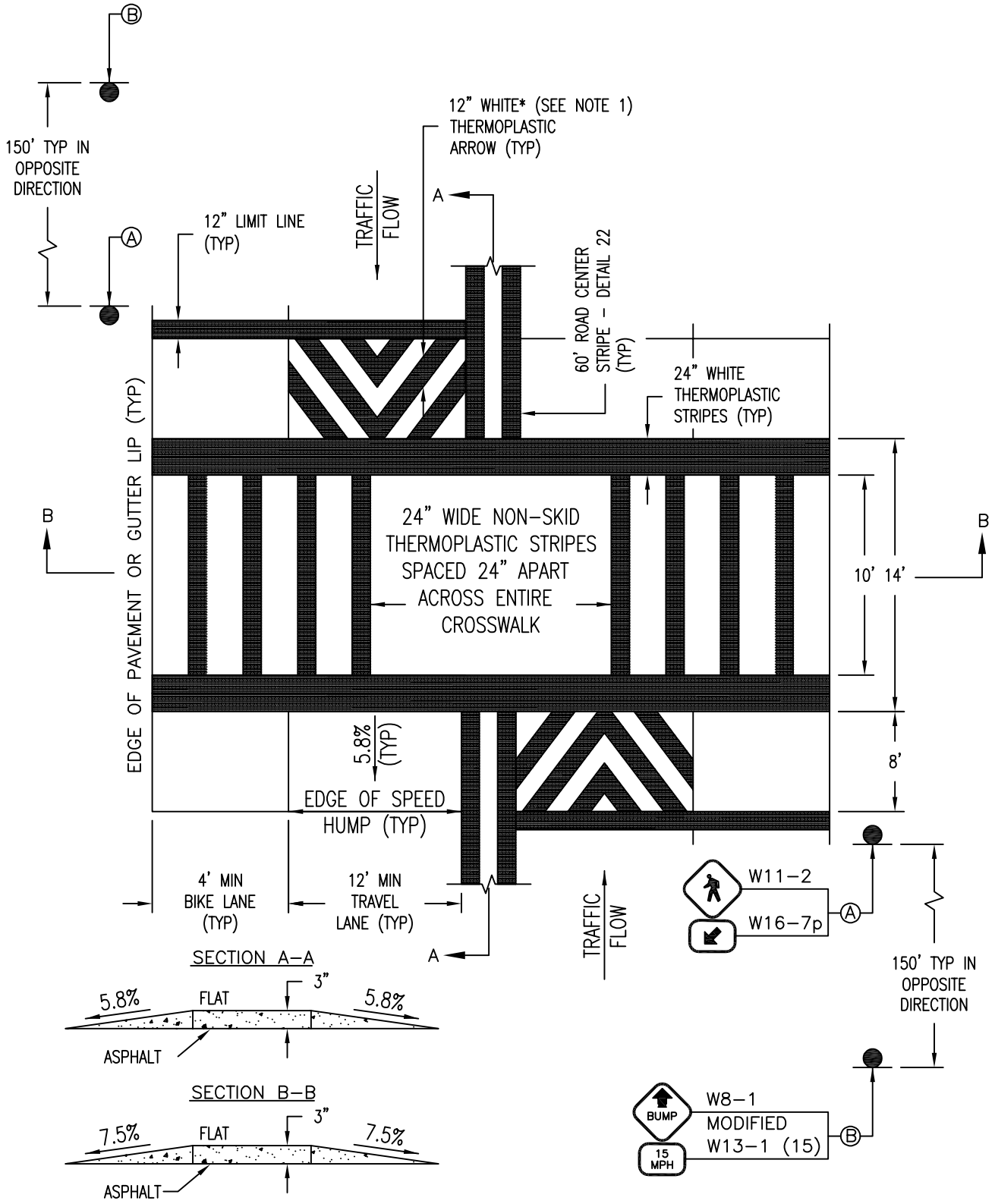

NOTES:

1. *-IN THE SCHOOL VICINITY, CONSULT THE CITY TRAFFIC ENGINEER

Date	By	Rev.

ST-35.DWG

SPEED TABLE CROSSWALK

CITY OF LIVERMORE
STANDARD DETAIL

Dwn: BC	Date: Feb-18	NO.
Ckd: Spec. Committee	Scale: NONE	ST-35

City Engineer

CITY
OF
LIVERMORE

STANDARD DETAILS

TABLE OF CONTENTS

WATER - W

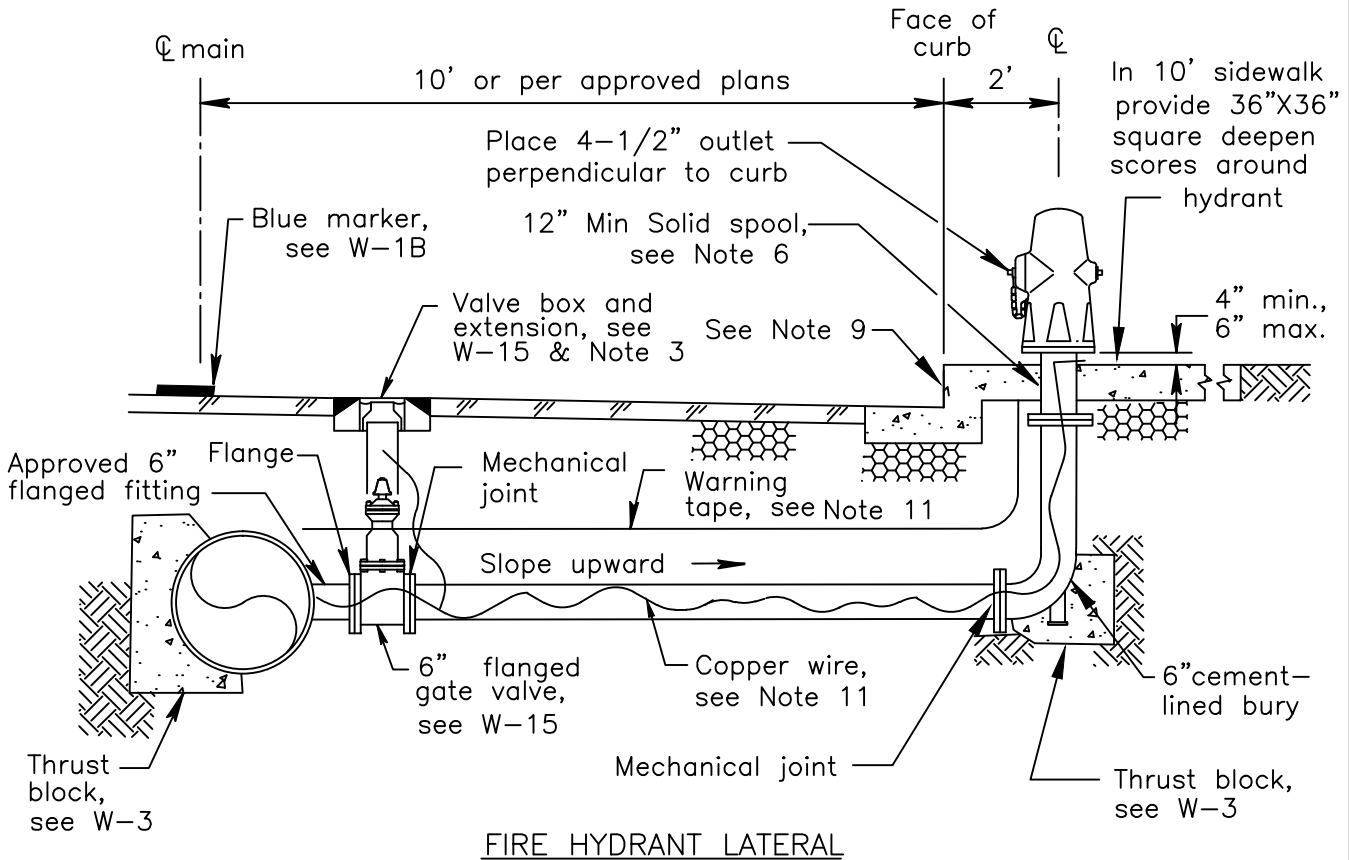

FIRE HYDRANT LATERAL

with 10' sidewalk or no sidewalk

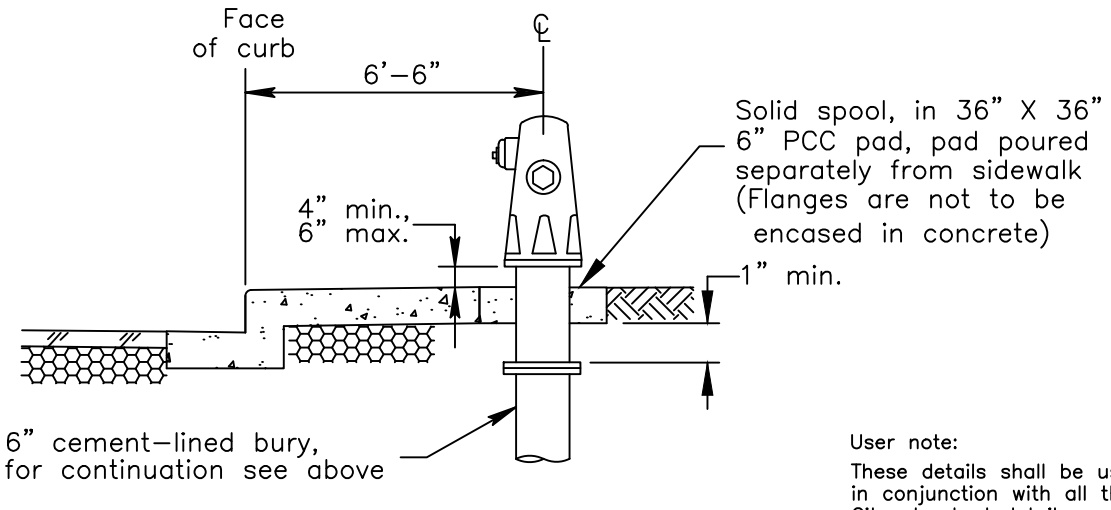

FIRE HYDRANT LATERAL

with 5' sidewalk

User note:

These details shall be used in conjunction with all the City standard details and specifications. Refer to the City standard specifications for the materials, installation, testing, protective coatings, and other requirements.

Date:	By:	Rev:

FOR CITY OF LIVERMORE
WATER SERVICE AREA

FIRE HYDRANT AND LATERAL

CITY OF LIVERMORE
STANDARD DETAIL

Dwn: FY	Date: May–13	No.
Ckd: Spec. Committee	Scale: None	W–1A

City Engineer

W01A.DWG

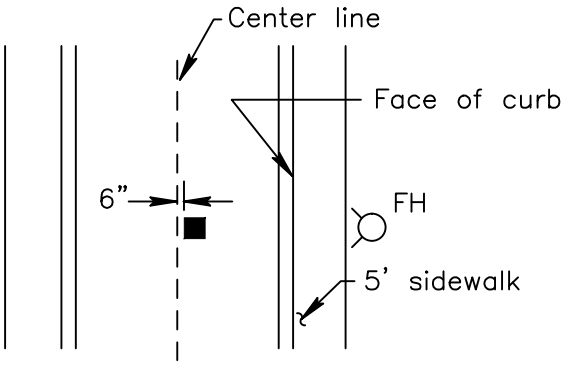

FH MARKER LOCATION

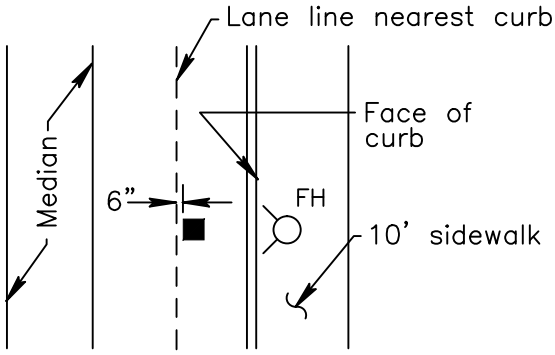

FH MARKER LOCATION
with median

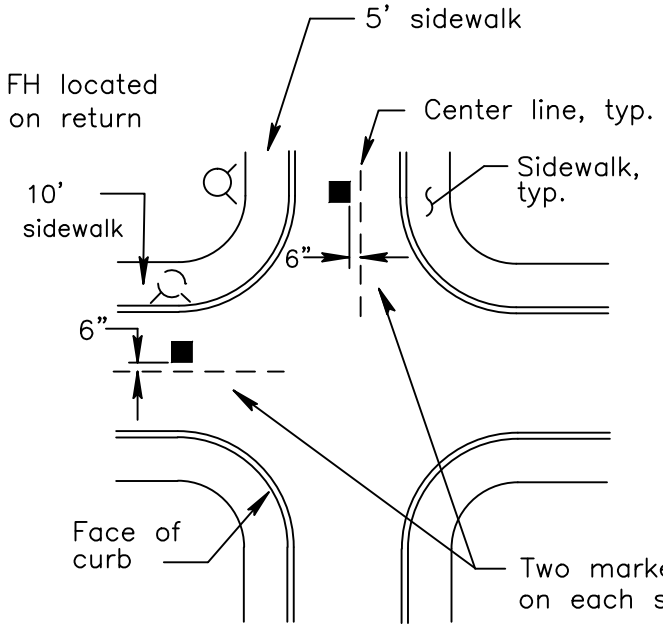

FH MARKER LOCATION
at intersection

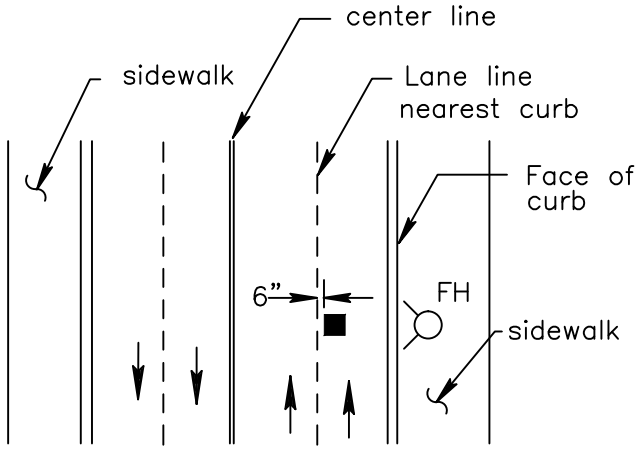

FH MARKER LOCATION
without median

■ Two–way blue reflective pavement marker, typ.

User note:
These details shall be used in conjunction with all the City standard details and specifications. Refer to the City standard specifications for the materials, installation, testing, protective coatings, and other requirements.

Date:	By:	Rev:

W01B.DWG

FIRE HYDRANT MARKER

CITY OF LIVERMORE
STANDARD DETAIL

Dwn: M–W	Date: May–13	No.
Ckd: Spec. Committee	Scale: None	W–1B

City Engineer

Notes:

1. Deviations to the installation and location of fire hydrants are subject to Fire Department approval.
2. Where sidewalk is not provided, cast pipe in 36" sq. x 6" concrete pad.
3. Gate valve lids to be painted per the City Standard Specifications.
4. Blue reflective pavement markers are required. Marker and installation of marker per Section 85–1.05 and 85–1.06 of Caltrans Standard Specifications. Use Rapid Set Adhesive only per Caltrans Standard Specifications Section 95–2.04.
5. See W–15 for valve installation, and W–12 for guard post installation.
6. Hydrant flange bolts above grade to be break–off type with hollow bolt end installed facing up. All other hydrant flange bolts to be 12" min solid spool.
7. Locate as follows: Min. 6" from face of curb or back of sidewalk to closest point on fire hydrant, and:

   For 5' sidewalk = 6'–6" from face of curb.
   For 10' sidewalk, = 1'–6" from face of curb.
   separated sidewalk,
   or no sidewalk

   Residential = Minimum 5' from driveways.
   Minimum 3' from any obstruction.

   Commercial/ Industrial = Minimum 10' from driveways.
   Minimum 3' from any obstruction.

   Intersections = At end of return.

   For offset to street trees see L–3.
8. Stamp or chip 3" high valve type "GV" and distance of valve from face of curb, in Roman numerals, in face of curb over fire hydrant lateral. Paint the Roman numerals per the City Standard Specifications.
9. Warning signs are required for all Fire Hydrant installations on Recycled Water Systems. Contact the City Water Resources Division for specific size, materials, wording, and location.
10. Fire hydrant lateral shall have warning tape and copper wire installed along it's entire length and extended up through the concrete pad, see W–1A.
11. Fire hydrant and lateral in the California Water Company service area are to be constructed per Cal Water's latest standard detail.

User note:
These details shall be used in conjunction with all the City standard details and specifications. Refer to the City standard specifications for the materials, installation, testing, protective coatings, and other requirements.

Date:	By:	Rev:

W01C.DWG

FIRE HYDRANT AND LATERAL NOTES

CITY OF LIVERMORE
STANDARD DETAIL

Dwn: FY/HI	Date: Sept–22	No.
Ckd: Spec. Committee	Scale: None	W–IC

City Engineer

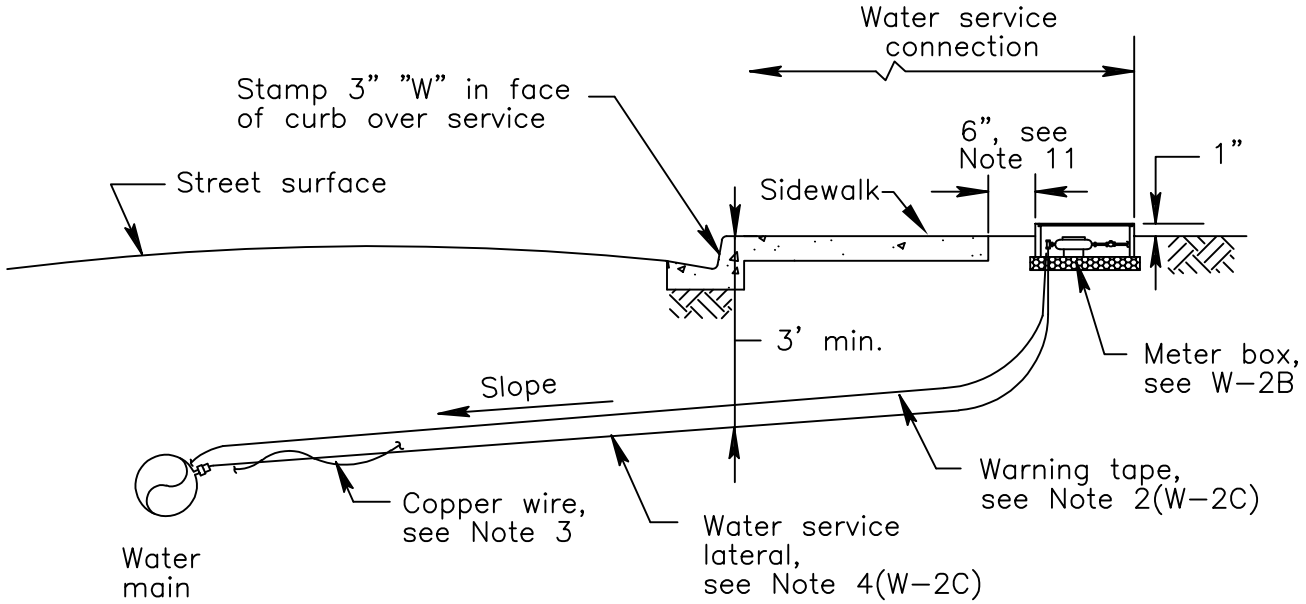

SERVICE CONNECTION

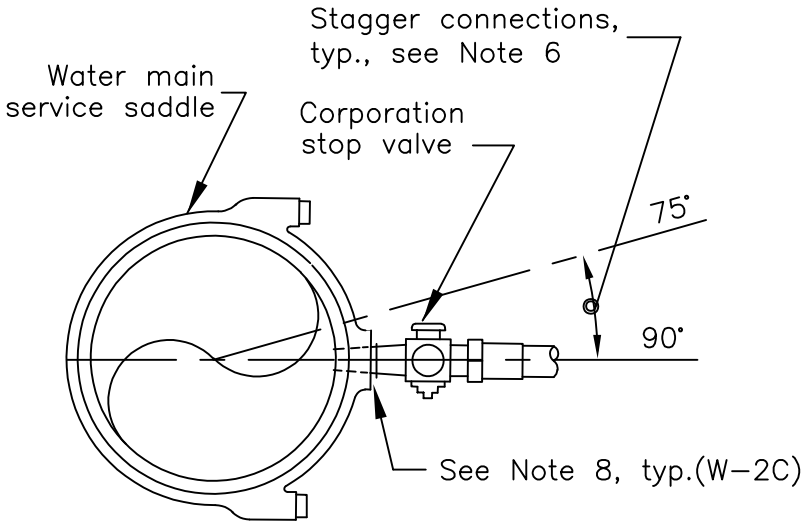

TYPICAL WATER MAIN CONNECTION

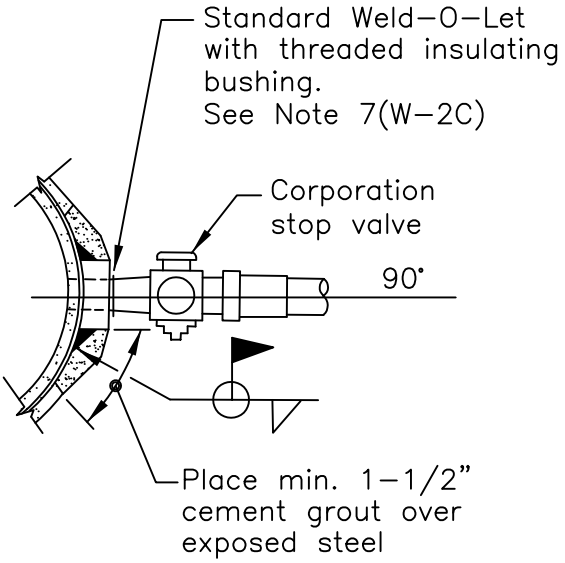

ALTERNATE WATER MAIN CONNECTION FOR STEEL PIPE

User note:
These details shall be used in conjunction with all the City standard details and specifications. Refer to the City standard specifications for the materials, installation, testing, protective coatings, and other requirements.

Date:	By:	Rev:

WO2A.DWG

WATER SERVICE CONNECTION
1", 1-1/2", and 2"

CITY OF LIVERMORE
STANDARD DETAIL

Dwn: M-W-HI	Date: Apr-23	No.
Ckd: Spec. Committee	Scale: None	W-2A

City Engineer

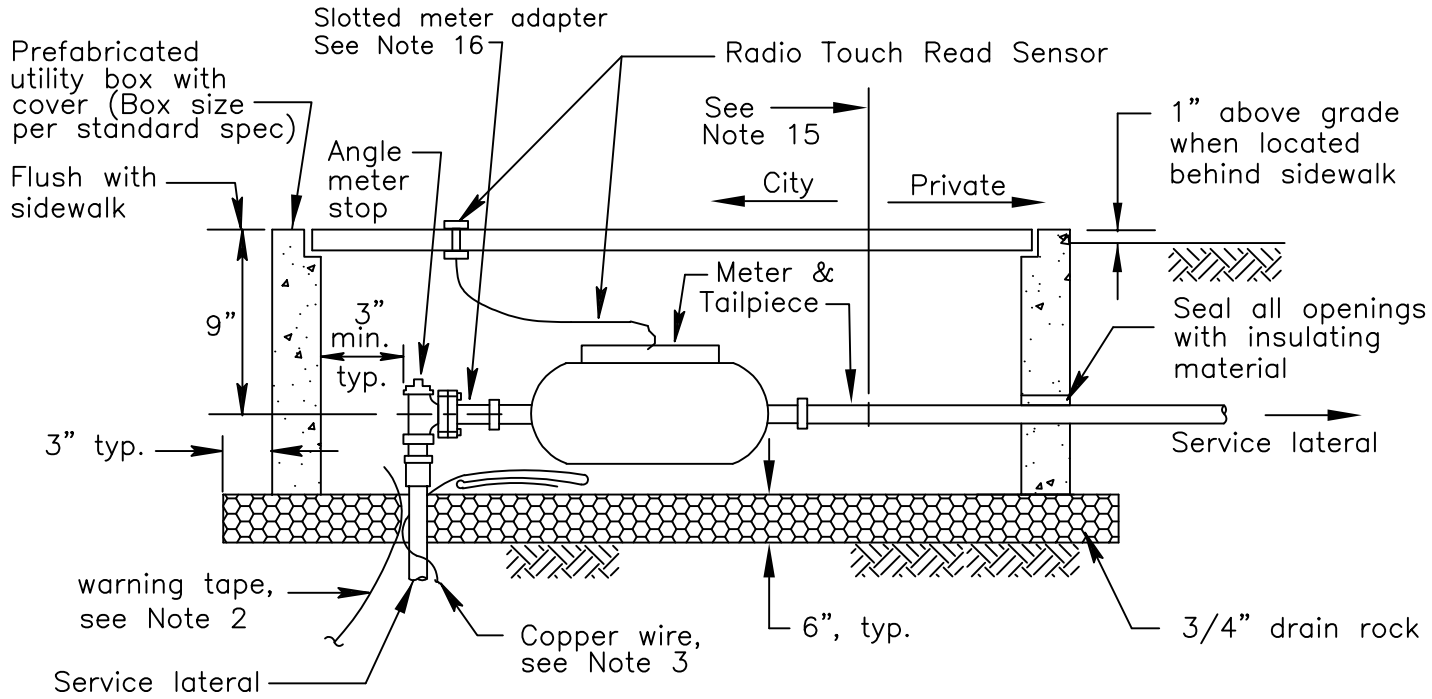

TYPICAL PISTON METER

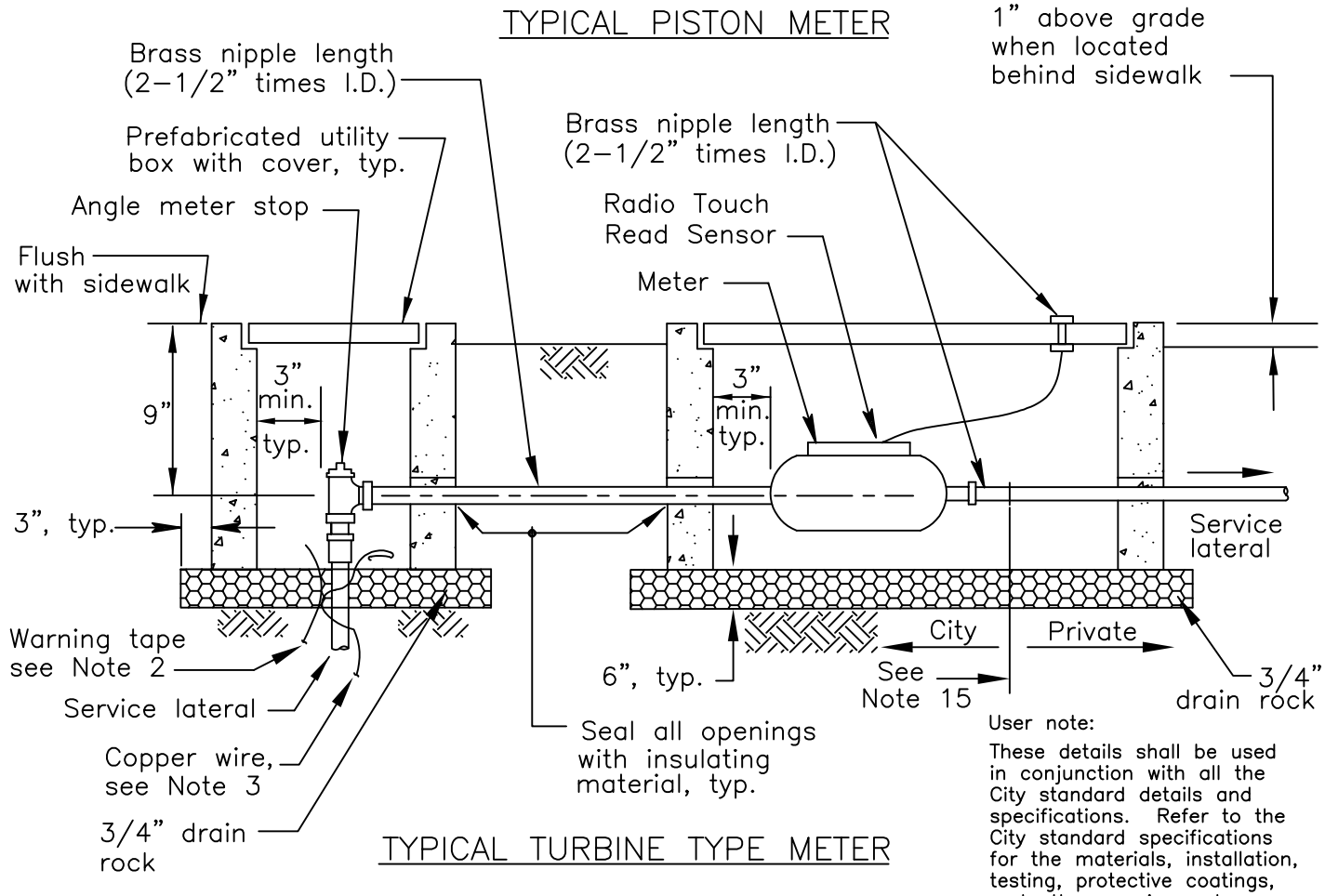

TYPICAL TURBINE TYPE METER

User note:

These details shall be used in conjunction with all the City standard details and specifications. Refer to the City standard specifications for the materials, installation, testing, protective coatings, and other requirements.

Date:	By:	Rev:

WATER SERVICE CONNECTION 1", 1-1/2", and 2"

CITY OF LIVERMORE
STANDARD DETAIL

Dwn: FY/HI	Date: Apr-23	No.
Ckd: Spec. Committee	Scale: None	W-2B

City Engineer

W02B.DWG

Notes:

1. A check valve is required after the meter if service is a "Dedicated Fire Service". See W-10A
2. Provide warning tape. Place 1'-0" above service lateral between water main and curb. Lower to directly above service lateral from curb to meter.
3. Provide AWG Number 10 USE-2 insulated copper wire between meter and water main. Wrap insulated copper wire around service lateral and splice into main line copper wire. Provide 18" slack in utility box.
4. All service laterals to be polyethylene tubing, installed joint free. Industrial/commercial service laterals to be 2" CTS polyethylene.
5. Service connections shall be on service side of pipe and spaced at least 2' from fittings or end of pipe; and a minimum of 2' apart along water main.
6. Service connections shall be staggered 15 degrees from location of adjacent connection, and shall be at 75 and 90 degrees from vertical.
7. After completing water main connection, all coatings shall be repaired. All ferrous surfaces shall be coated.
8. From corporation stop valve through meter installation, all hardware to be brass or bronze (including nuts and bolts)+(lead free).
9. Split "T" services are not allowed.
10. All meters are to be purchased from the City, and installed by the city. All fittings or appurtenances not supplied with the meter are to be supplied by the contractor.
11. Location of meter box:
    - 6" from back of 5' monolithic sidewalks
    - 6" from back of curb without sidewalk or in 10' sidewalk
    - 6" from front of 5' separated sidewalk.
12. Service lateral shall be perpendicular to main, and run in a straight line without bends. Service laterals must not cross.
13. For turbine meter 3" and larger see W-11.
14. Meters for irrigation systems 1 1/2" and larger must be a turbine meter.
15. The City's maintenance jurisdiction is up to the tail piece.
16. Use a slotted meter adapter for meter sizes 1" and smaller when service laterals are 1-1/2" or 2".
17. For water service connections in City's Pressure Zone (east of Vasco Road and north of Highway I-580), pressure reducing valves shall be installed. For areas south of Highway I-580, west of Vasco Road, and Zone 1 area, contact the Building and Water Resources Divisions for information.
18. A reduce pressure back flow device is required on all commercial services.

User note:
These details shall be used in conjunction with all the City standard details and specifications. Refer to the City standard specifications for the materials, installation, testing, protective coatings, and other requirements.

Date:	By:	Rev:

W02C.DWG

WATER SERVICE CONNECTION
1", 1-1/2", and 2"
NOTES

CITY OF LIVERMORE
STANDARD DETAIL

Dwn: FY/HI	Date: Sept-22	No.
Ckd: Spec. Committee	Scale: None	W-2C
City Engineer		

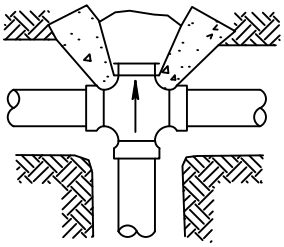

75 % of "Tee" thrust

BLIND CROSS

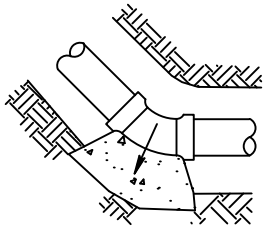

100% "Elbow" thrust

HORIZONTAL BEND

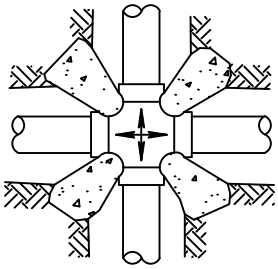

75 % of "Tee" thrust

CROSS

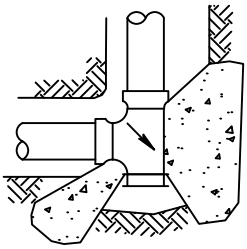

100% of "Tee" thrust

75% of "Tee" thrust

BLIND TEE

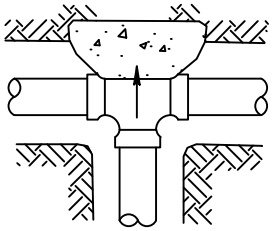

100% of "Tee" thrust

TEE

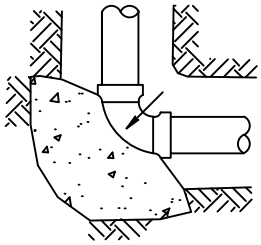

100% of "Elbow" thrust

90° ELL

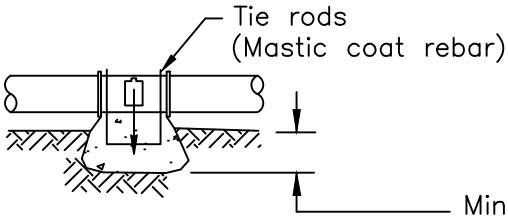

100 % of "tee" thrust

IN – LINE

VERTICAL VIEW

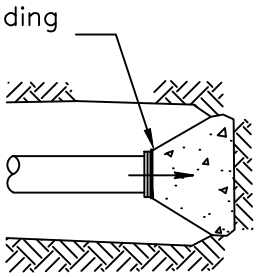

100 % of "Tee" thrust

DEAD – END

PLAN VIEW

User note:

These details shall be used in conjunction with all the City standard details and specifications. Refer to the City standard specifications for the materials, installation, testing, protective coatings, and other requirements.

Date:	By:	Rev:

THRUST/ANCHOR BLOCK

CITY OF LIVERMORE

STANDARD DETAIL

Dwn: FY	Date: May–13	No.
Ckd: Spec. Committee	Scale: None	W–3A

City Engineer

W03A.DWG

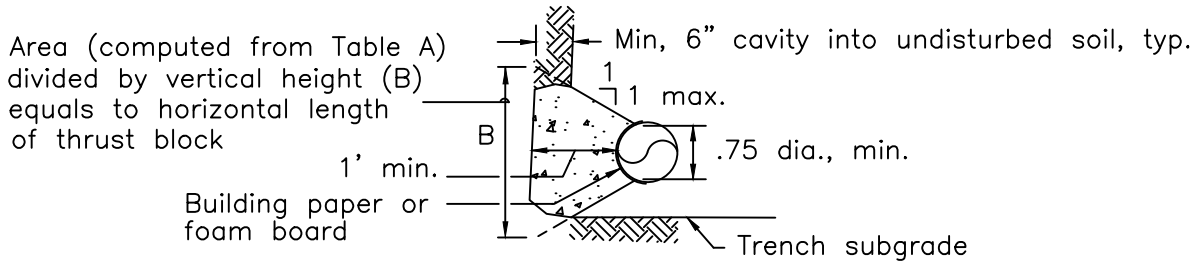

TYPICAL THRUST BLOCK SECTION–VERTICAL VIEW

TABLE A – THRUST BLOCKS FOR FITTINGS

THRUST PER PSI OF WATER PRESSURE AT VARIOUS FITTINGS (T)					
PIPE SIZE	DEAD END, TEE, OR CROSS	90° ELBOW	45° ELBOW	22–1/2° ELBOW	11–1/4° ELBOW
4	19	27	15	7	4
6	39	55	30	15	8
8	67	94	51	26	13
10	109	154	84	43	21
12	155	218	119	61	32
14	210	296	161	82	41
16	272	383	209	106	53
18	351	494	269	137	68
20	434	611	333	169	85
24	623	878	478	244	122

The bearing area required for a thrust block shall be determined form the following formula:

$$A = \frac{P \times T}{S}$$

Where A= Area of bearing required for thrust block (sq. ft.).
P= Internal Pressure (PSI). 200 PSI minimum, see Note 1.
T= Thrust (lb. per PSI of water pressure) form Table A above.
S= Allowable bearing pressure of Soil (PSF). See Note 2.
PSF= Pound per square foot
PSI= Pound per square inch

Example:

Given : An 8–inch 90° elbow with internal pressure (P)= 200 PSI, Allowable bearing pressure of Soil (S)= 1500 PSF.

From Table : Thrust (T)= 94 lb. per PSI of water pressure.

Required bearing area for thrust block (A) $= \frac{94 \times 200}{1500} =$ 12.5 sq. ft.

User note:
These details shall be used in conjunction with all the City standard details and specifications. Refer to the City standard specifications for the materials, installation, testing, protective coatings, and other requirements.

Date:	By:	Rev:

THRUST/ANCHOR BLOCK

CITY OF LIVERMORE
STANDARD DETAIL

Dwn: M–W/KY | Date: May–13 | No.
Ckd: Spec. Committee | Scale: None | W–3B

City Engineer

W03B.DWG

Notes:

1. In using the tables, use the maximum internal pressure anticipated (i.e. hydrostatic test pressure, possible surge pressure, due to pump shut–off, etc.). Minimum 200 PSI
2. See soils report for bearing strength of soil. In the absence of soils report obtain soil bearing strength from the ENGINEER. (Note: 1500 PSF is used only as an example in these calculations.)
3. Thrust blocks are not required on PVC pipe with solvent welded joints.
4. Thrust blocks for horizontal loads are not required if $(0.0139 \times \text{dia. of pipe in inches})^2 \times$ allowable soil bearing pressure (PSF) is larger than the thrust calculated in the tables.
5. Install thrust blocks at all pipe size changes, and at all fittings.
6. Figure (100%) in thrust block diagrams indicates percent of total calculated thrust load to be applied for each bearing area. Thrust loads to be calculated per Table A and example on W–3B.
7. Arrows (⟶) indicate thrust direction.
8. Concrete is to be placed against undisturbed soil, in minimum 6" cavity.
9. Limit thrust/anchor block contact to "fittings" only, except on Horizontal Curves. Building paper or foam board material shall be used to prevent contact between concrete and "fittings".

User note:

These details shall be used in conjunction with all the City standard details and specifications. Refer to the City standard specifications for the materials, installation, testing, protective coatings, and other requirements.

Date:	By:	Rev:

THRUST/ANCHOR BLOCK NOTES

CITY OF LIVERMORE
STANDARD DETAIL

Dwn: M–W	Date: May–13	No.
Ckd: Spec. Committee	Scale: None	W–3C

City Engineer

W03C.DWG

Air Release/Blow-Off assembly to be installed at the end of "Dead-end" water mains that are sloped upward, and as shown on the plans.

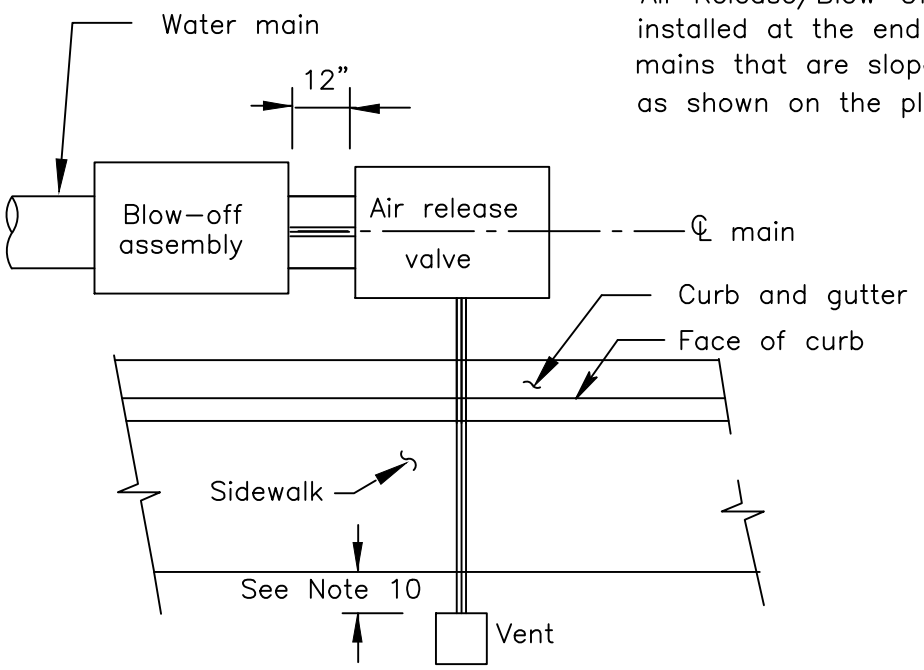

PLAN WITH SIDEWALK

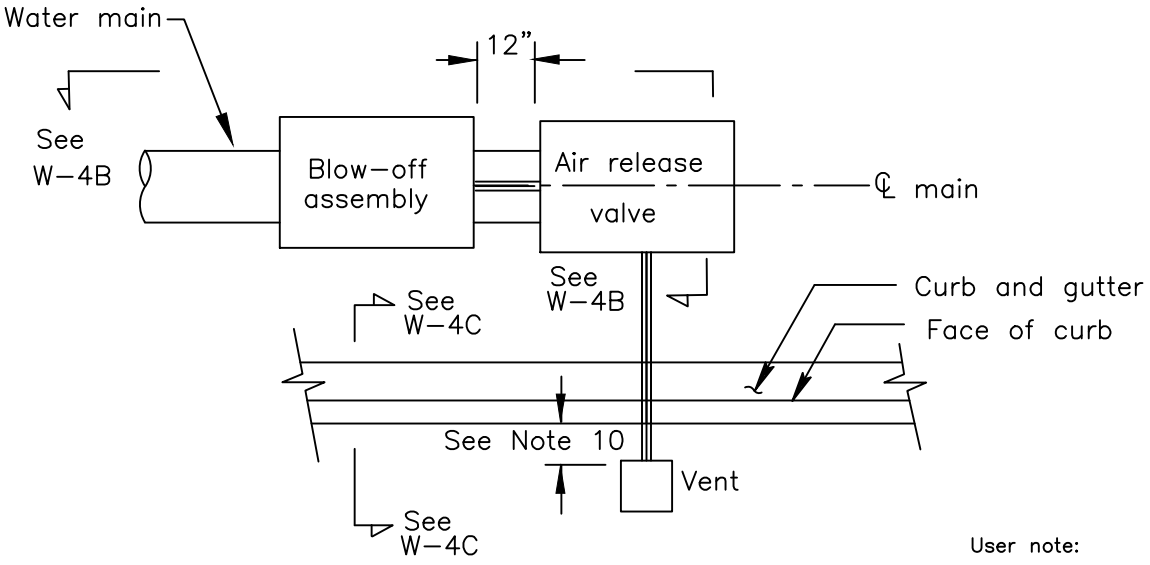

PLAN WITHOUT SIDEWALK

User note:
These details shall be used in conjunction with all the City standard details and specifications. Refer to the City standard specifications for the materials, installation, testing, protective coatings, and other requirements.

Date:	By:	Rev:

AIR RELEASE/BLOW-OFF

(FOR CUL-DE-SAC AND DEAD END STREET)

CITY OF LIVERMORE
STANDARD DETAIL

Dwn: KY	Date: May-13	No.
Ckd: Spec. Committee	Scale: None	W-4A

City Engineer

W04A.DWG

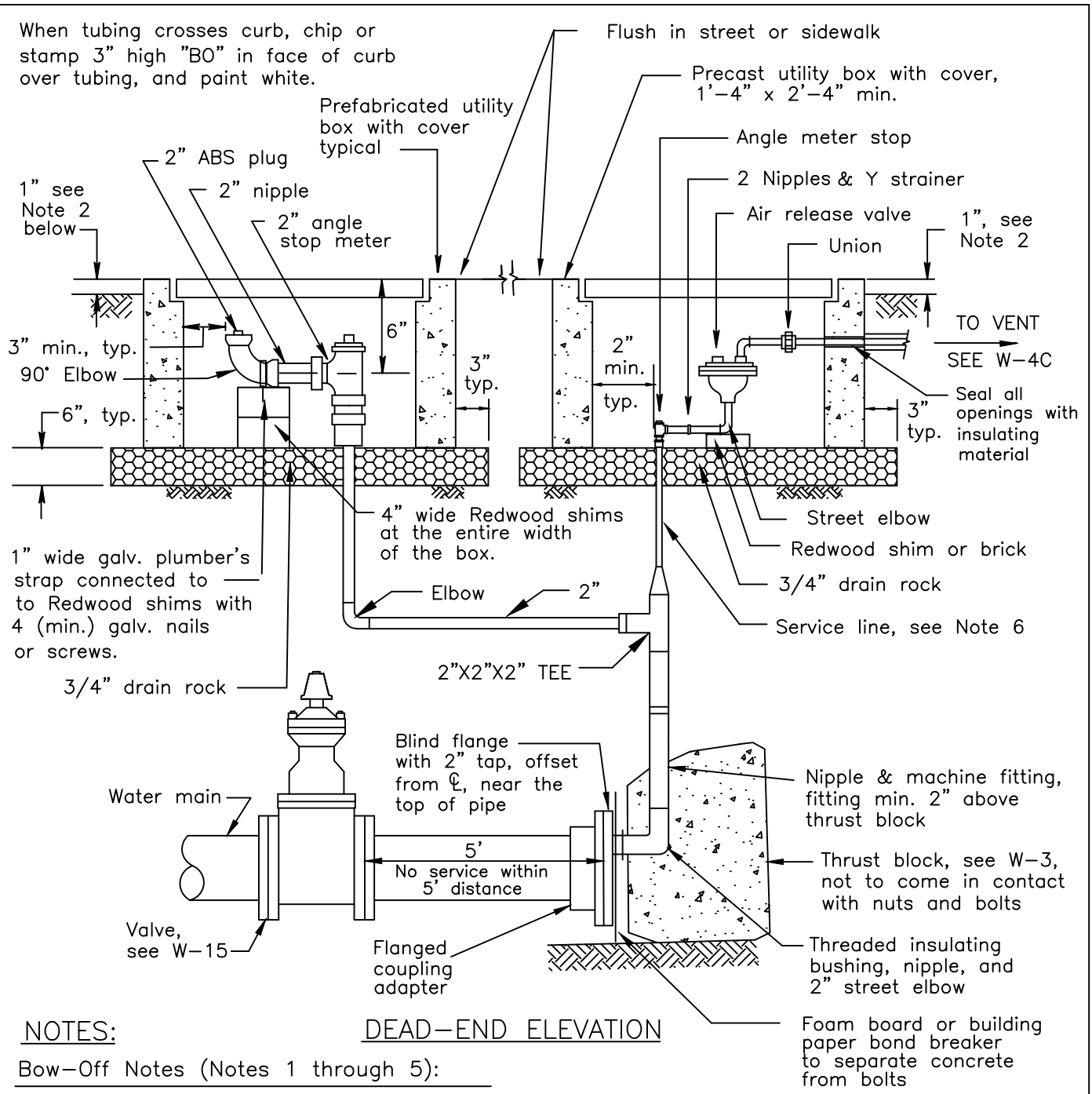

DEAD-END ELEVATION

NOTES:

Bow-Off Notes (Notes 1 through 5):

1. Contractor shall not operate City valves. 24 hour notice required for City to operate valves.
2. Locate utility box 1" above grade in unimproved areas.
3. All material to be brass or bronze, except 2" ABS plug.
4. See W-5B for "In-Line" Blow-off.
5. For mains larger than 12" Blow-off assembly must be designed for adequate flow rate and approved by the ENGINEER.

User note:
These details shall be used in conjunction with all the City standard details and specifications. Refer to the City standard specifications for the materials, installation, testing, protective coatings, and other requirements.

Date:	By:	Rev:

AIR RELEASE/BLOW-OFF

(FOR CUL-DE-SAC AND DEAD END STREETS)

CITY OF LIVERMORE
STANDARD DETAIL

Dwn: FY	Date: May-13	No.
Ckd: Spec. Committee	Scale: None	W-4B

City Engineer

W04B.DWG

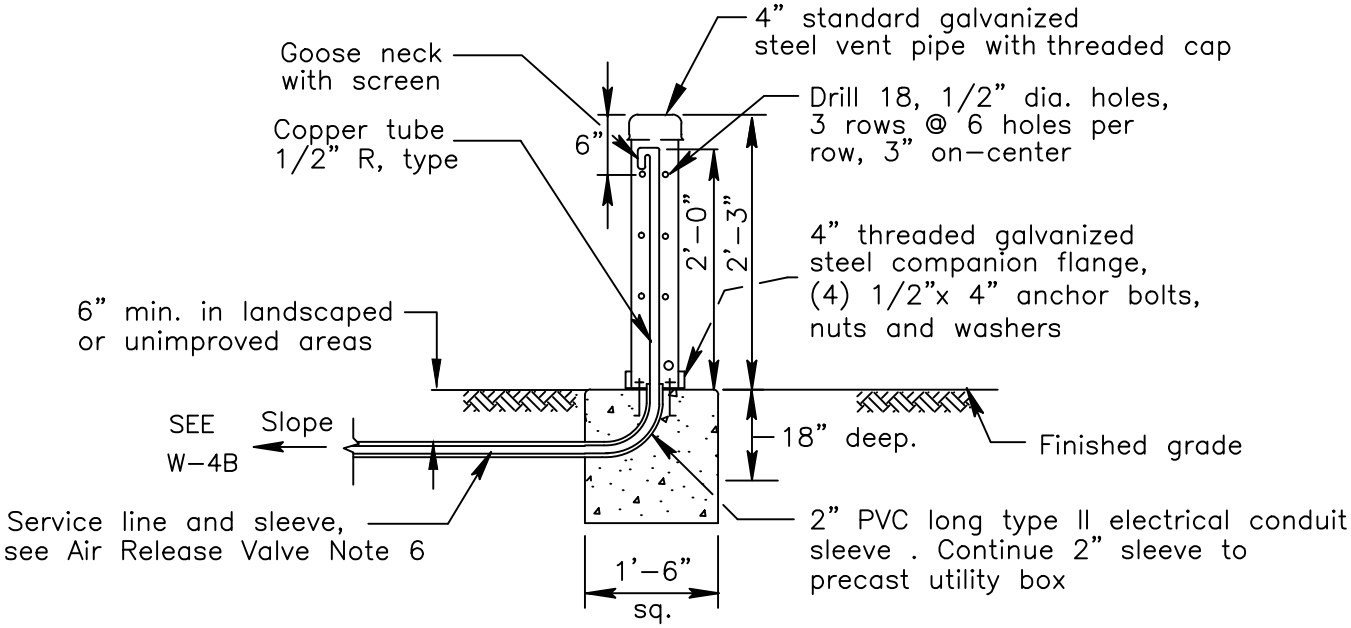

VENT ELEVATION

NOTES CONTINUED:

Air Release Valve Notes (Notes 6 through 15):

6. All service lines shall have warning tape and copper wire installed along its entire length. See W-2.
7. Provide bolt down cover on utility box.
8. All line and hardware sizes depend on size of air release valve.
9. All metal to be brass or bronze from the main thru the PVC street elbow above the air release valve. Line shall be copper tubing from the PVC street elbow to the top of the vent pipe.
10. 6" behind back of sidewalk or 12" behind back of curb without sidewalk.
11. Stamp "AV" with 3" letters in face of curb over tubing and paint white.
12. Paint vent pipe per the City Standard Specifications.
13. PVC street elbow above valve shall have a compression by mechanical iron pipe adapter.
14. Air release valves shall be 1" for pipelines less than or equal to 12" and 2" for pipelines greater than 12".
15. Orifice size for 1" and 2" air release valves shall be determined as follows:

Valve size	Max. operating pressure	Orifice size
1"	150 psi	1/4"
1"	200 psi	3/16"
2"	150 psi	5/16"
2"	200 psi	1/4"

User note:
These details shall be used in conjunction with all the City standard details and specifications. Refer to the City standard specifications for the materials, installation, testing, protective coatings, and other requirements.

Date:	By:	Rev:

AIR RELEASE/BLOW-OFF

(FOR CUL-DE-SAC AND DEAD END STREETS)

CITY OF LIVERMORE
STANDARD DETAIL

Dwn: FY	Date: May-13	No.
Ckd: Spec. Committee	Scale: None	W-4C

City Engineer

WO4C.DWG

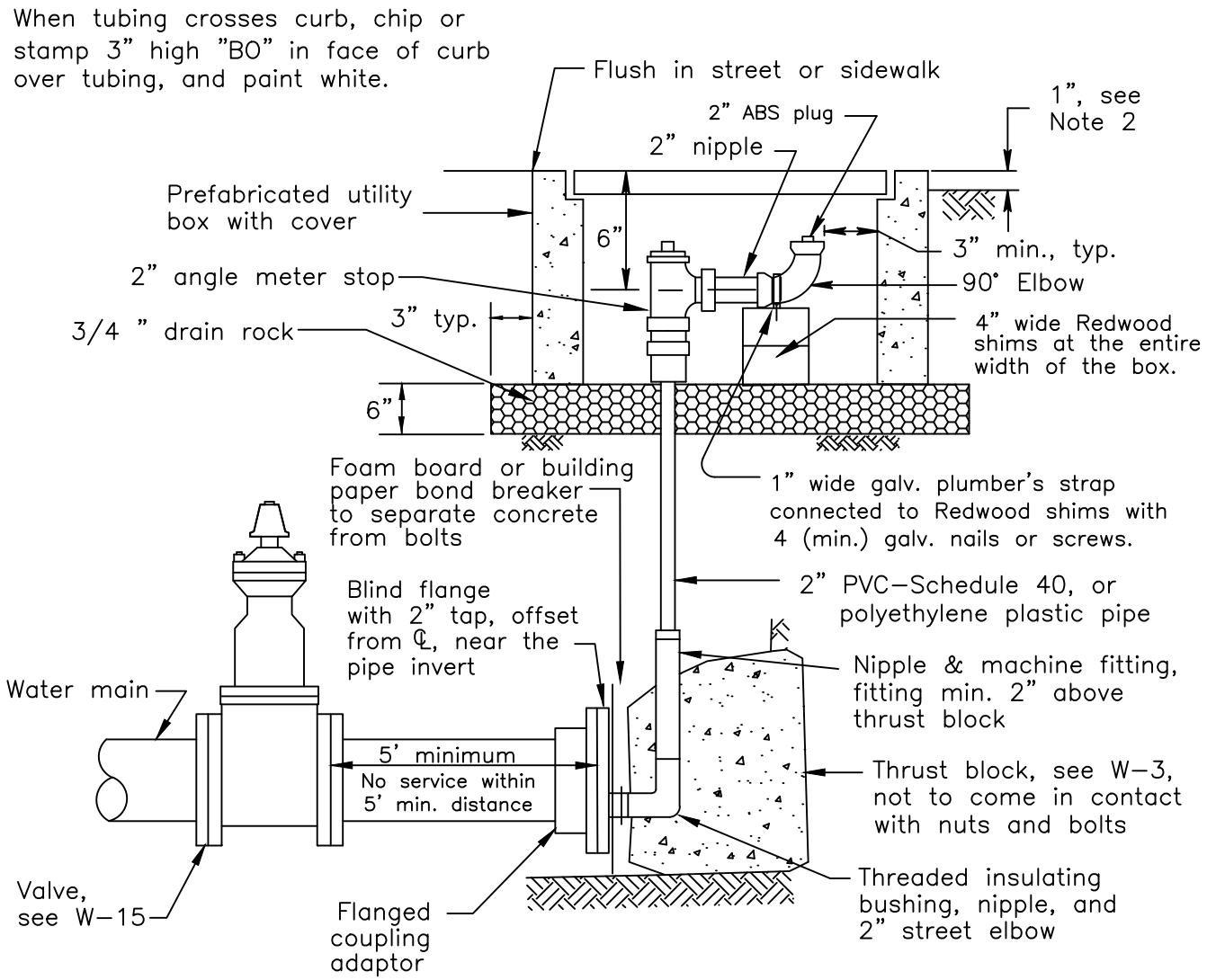

DEAD–END ELEVATION

Notes:

1. Contractor shall not operate City valves. 48 hour notice required for City to operate valves.
2. Locate utility box 1" above grade in unimproved areas.
3. All parts to be brass or bronze, except 2" ABS plug.
4. See W–5B for "In–Line" Blow–off.
5. For mains larger than 12" see W–5C.

User note:
These details shall be used in conjunction with all the City standard details and specifications. Refer to the City standard specifications for the materials, installation, testing, protective coatings, and other requirements.

Date:	By:	Rev:	DEAD END BLOW–OFF (FOR CUL–DE–SAC AND DEAD END STREETS)	CITY OF LIVERMORE STANDARD DETAIL		No.
				Dwn: FY	Date: May–13	W–5A
				Ckd: Spec. Committee	Scale: None	
				City Engineer		

W05A.DWG

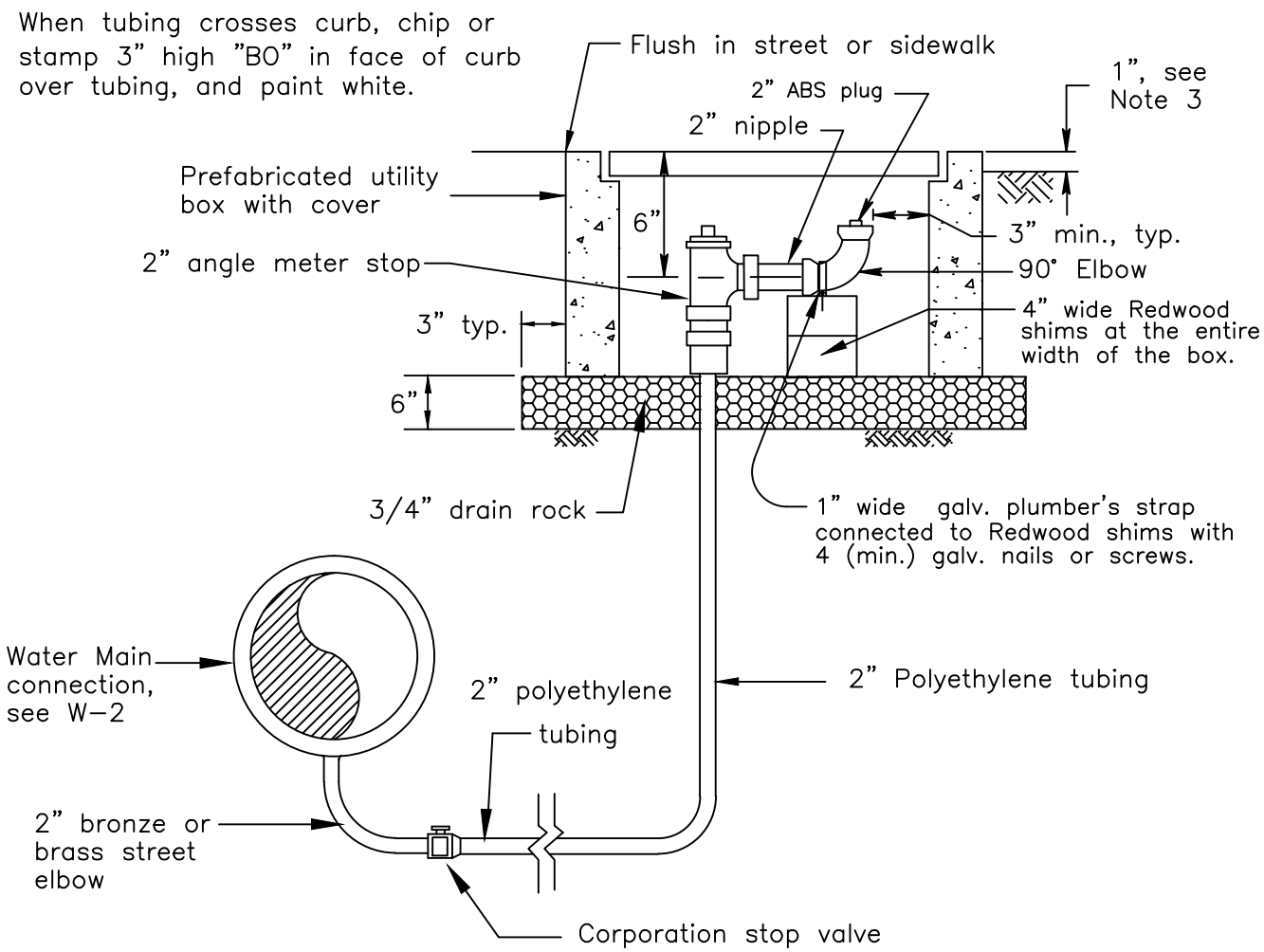

IN-LINE SECTION

(For 8" to 12" dia. pipe only.
For larger pipes see Note 1.)

Notes:

1. For pipe larger than 12" see W-5C.
2. On "In-Line" blow-off installations all polyethylene tubing shall have warning tape and copper wire installed along its entire length. See W-2.
3. Locate utility box 1" above grade in unimproved areas.
4. All metal to be brass or bronze, except 2" ABS plug.
5. See W-5A for CUL-DE-SAC and dead end streets blow-off.

User note:
These details shall be used in conjunction with all the City standard details and specifications. Refer to the City standard specifications for the materials, installation, testing, protective coatings, and other requirements.

Date:	By:	Rev:	IN-LINE BLOW-OFF	CITY OF LIVERMORE STANDARD DETAIL		No.
				Dwn: FY	Date: May-13	W-5B
				Ckd: Spec. Committee	Scale: None	
				City Engineer		

W05B.DWG

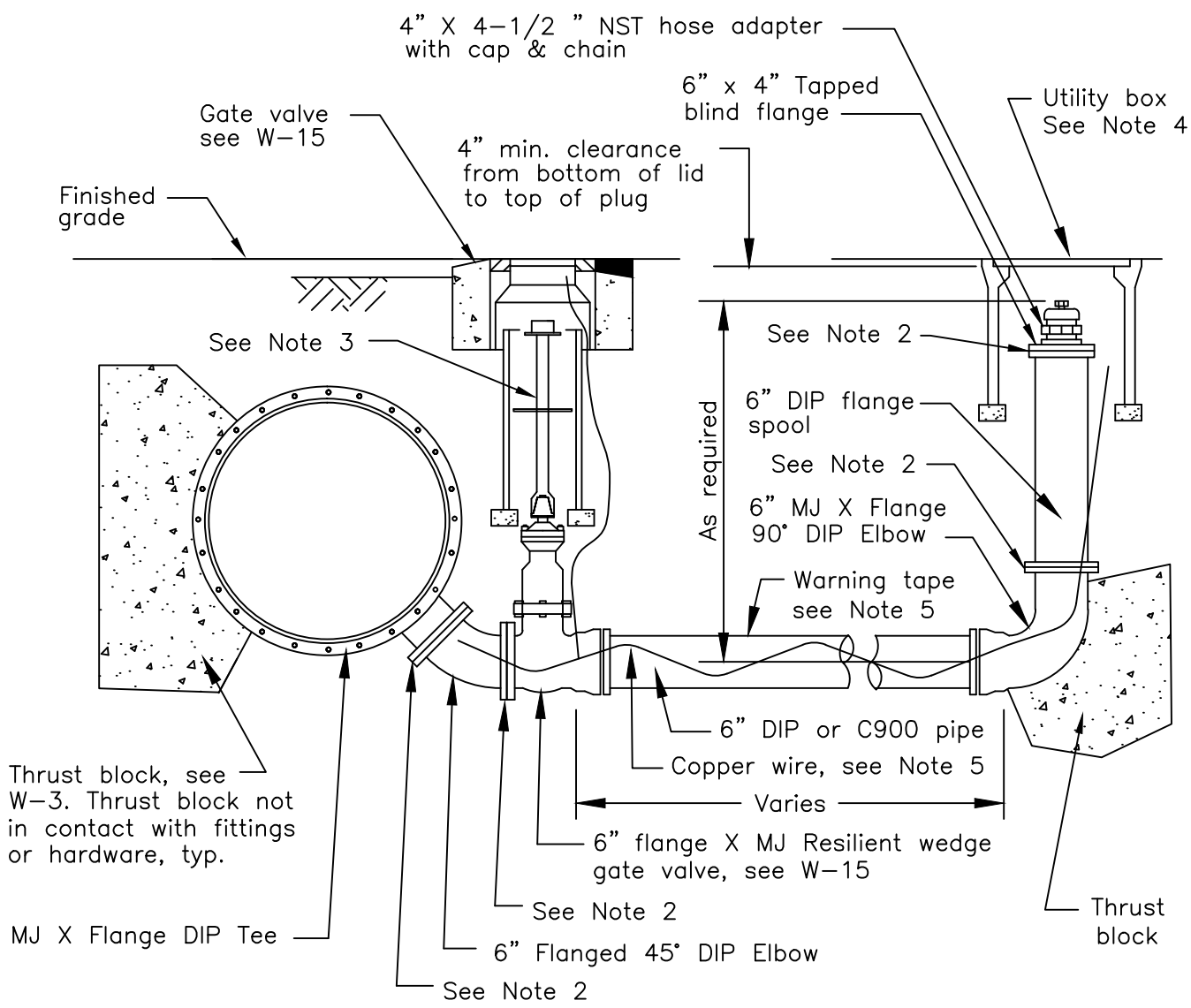

MJ = MECHANICAL JOINT

VERTICAL ELEVATION

Notes:

1. Use building paper or foam board to prevent direct contact of concrete with pipe fittings, flanges, or nuts and bolts. See W-3.
2. 6" 316 stainless steel bolt & gasket set.
3. Provide valve stem extension where depth to operator exceeds 8 feet.
4. Locate utility box for hose adapter 6" behind back of sidewalk or 12" behind back of curb without sidewalk. 1" above grade in landscaped or unimproved areas.
5. Low Point Blow-off line shall have warning tape and copper wire installed along it's entire length as shown, see W-2.

User note:
These details shall be used in conjunction with all the City standard details and specifications. Refer to the City standard specifications for the materials, installation, testing, protective coatings, and other requirements.

Date:	By:	Rev:

LOW POINT BLOW-OFF

(FOR PIPES LARGER THAN 12")

CITY OF LIVERMORE
STANDARD DETAIL

Dwn: FY	Date: May-13	No.
Ckd: Spec. Committee	Scale: None	W-5C

City Engineer

W5c.DWG

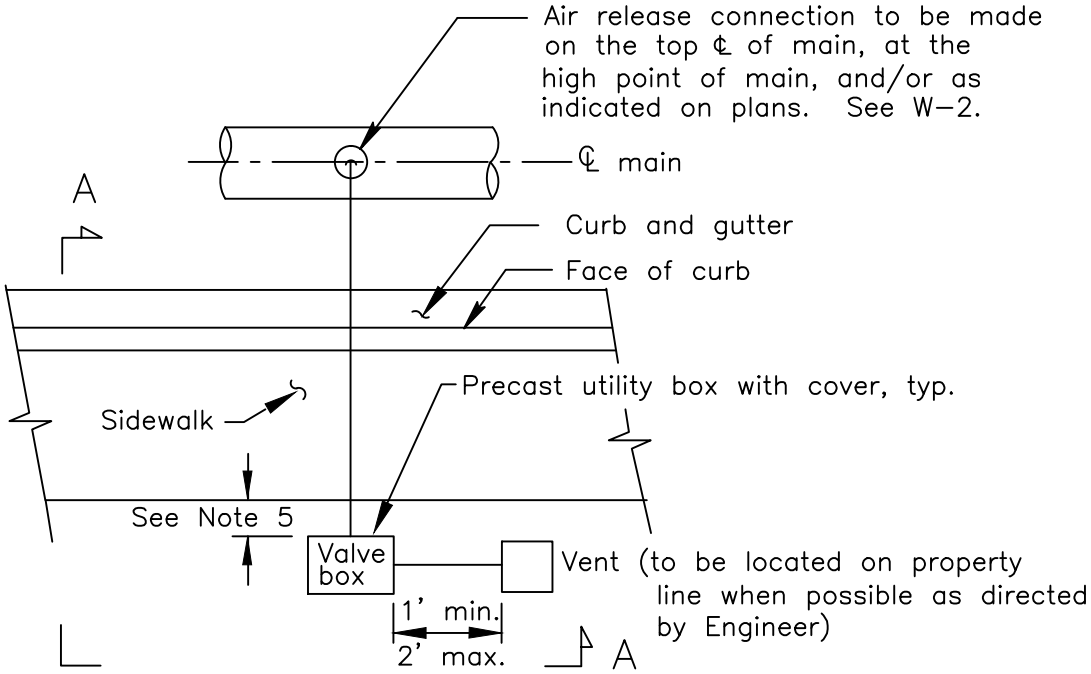

PLAN WITH SIDEWALK

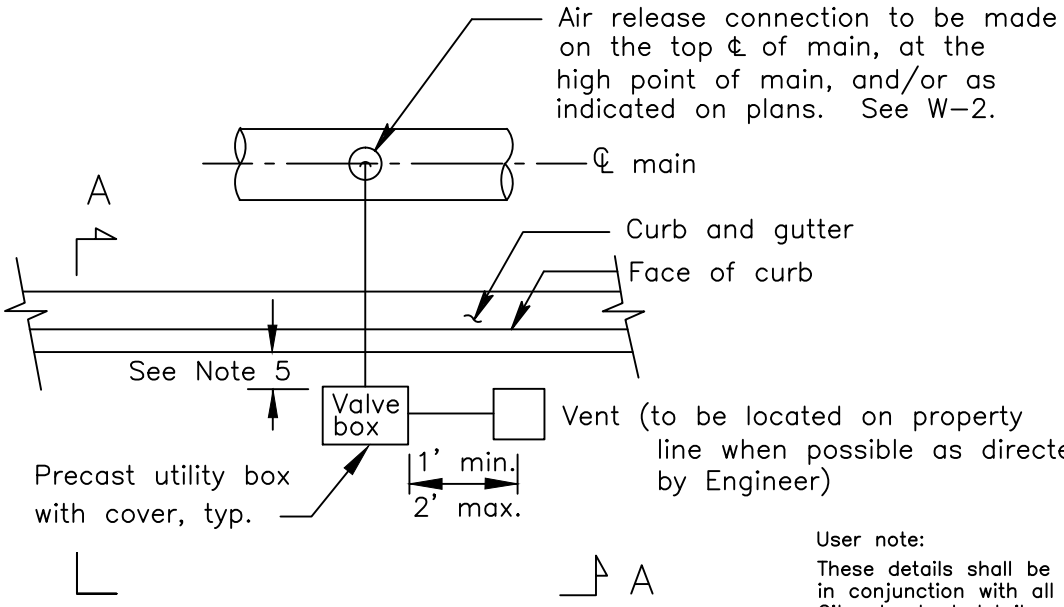

PLAN WITHOUT SIDEWALK

User note:
These details shall be used in conjunction with all the City standard details and specifications. Refer to the City standard specifications for the materials, installation, testing, protective coatings, and other requirements.

Date:	By:	Rev:

AIR RELEASE VALVE

CITY OF LIVERMORE
STANDARD DETAIL

Dwn: FY	Date: May–13	No.
Ckd: Spec. Committee	Scale: None	W–6A

City Engineer

W06A.DWG

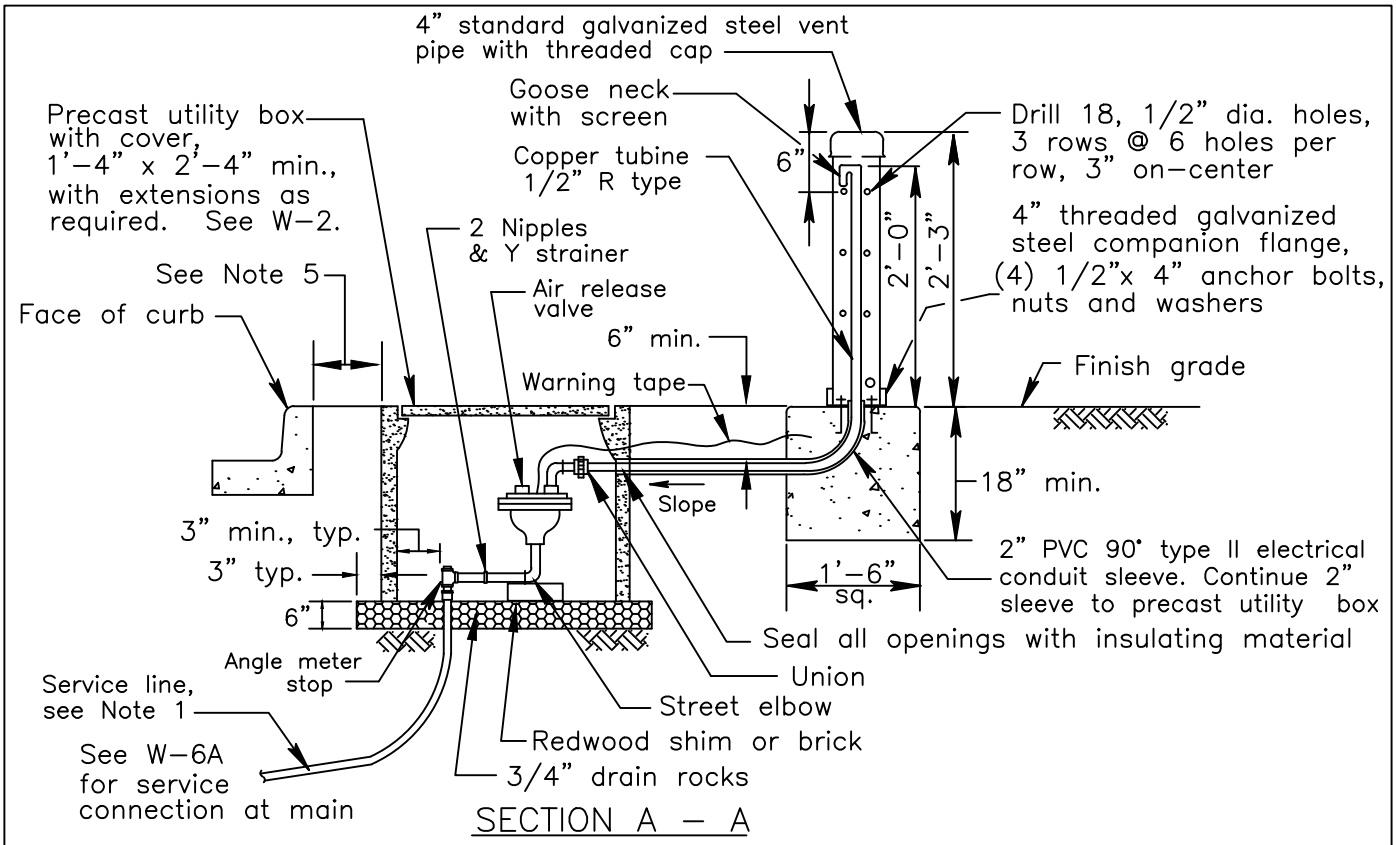

SECTION A – A

Notes:

1. All service lines shall have warning tape and copper wire installed along its entire length. See W-2.
2. Provide bolt down cover on utility box.
3. All line and hardware sizes depend on size of air release valve.
4. All metal to be brass or bronze from the main thru the PVC street elbow above the air release valve. Line shall be copper tubing from the PVC street elbow to the top of the vent pipe.
5. 6" behind back of sidewalk or 12" behind back of curb without sidewalk. (See W-6A for vent location.)
6. Stamp "AV" with 3" letters in face of curb over tubing and paint white.
7. Paint vent pipe per the City Standard Specifications.
8. PVC street elbow above valve shall have a compression by mechanical iron pipe adapter.
9. Air release valves shall be 1" for pipelines less than or equal to 12" and 2" for pipelines greater than 12".
10. Orifice size for 1" and 2" air release valves shall be determined as follows:

Valve size	Max. operating pressure	Orifice size
1"	150 psi	1/4"
1"	200 psi	3/16"
2"	150 psi	5/16"
2"	200 psi	1/4"

User note:
These details shall be used in conjunction with all the City standard details and specifications. Refer to the City standard specifications for the materials, installation, testing, protective coatings, and other requirements.

Date:	By:	Rev:

AIR RELEASE VALVE

CITY OF LIVERMORE
STANDARD DETAIL

Dwn: FY | Date: May-13 | No.
Ckd: Spec. Committee | Scale: None | W-6B
City Engineer

W06B.DWG

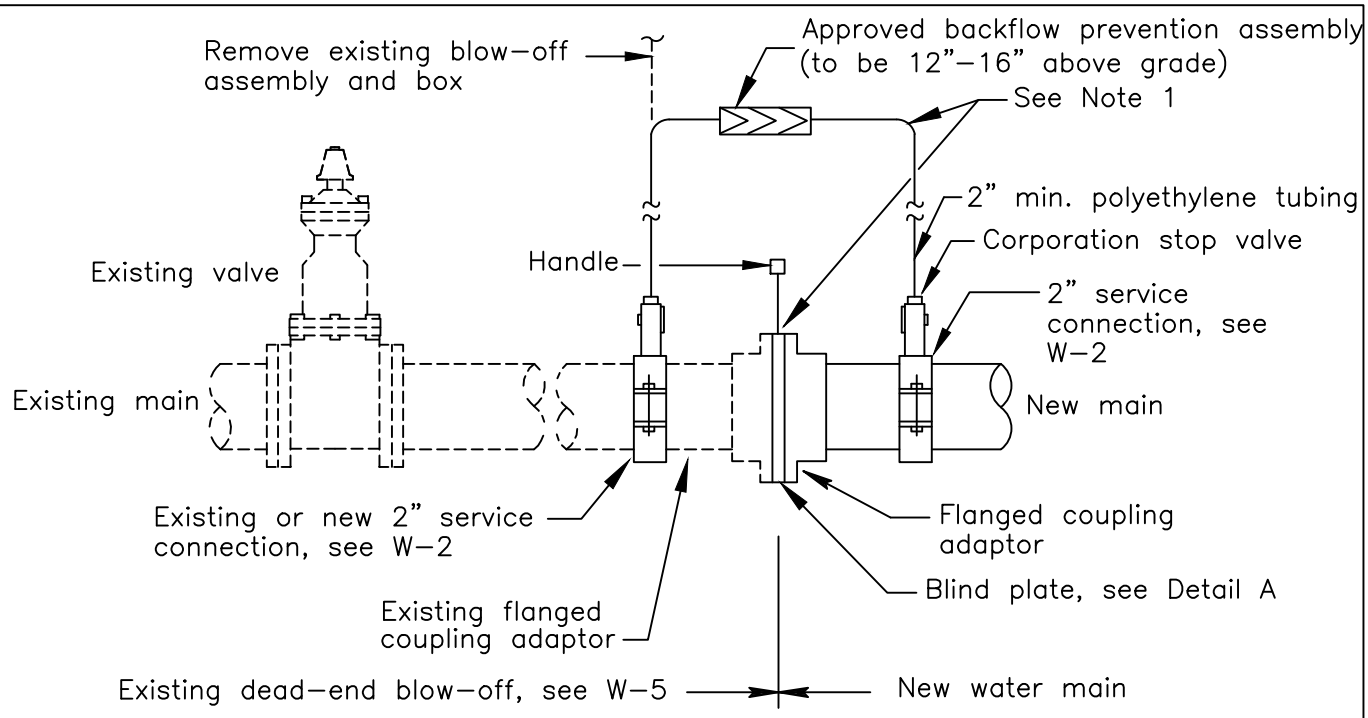

ELEVATION

Temporary Jumper Connection with Bypass – Primary Location

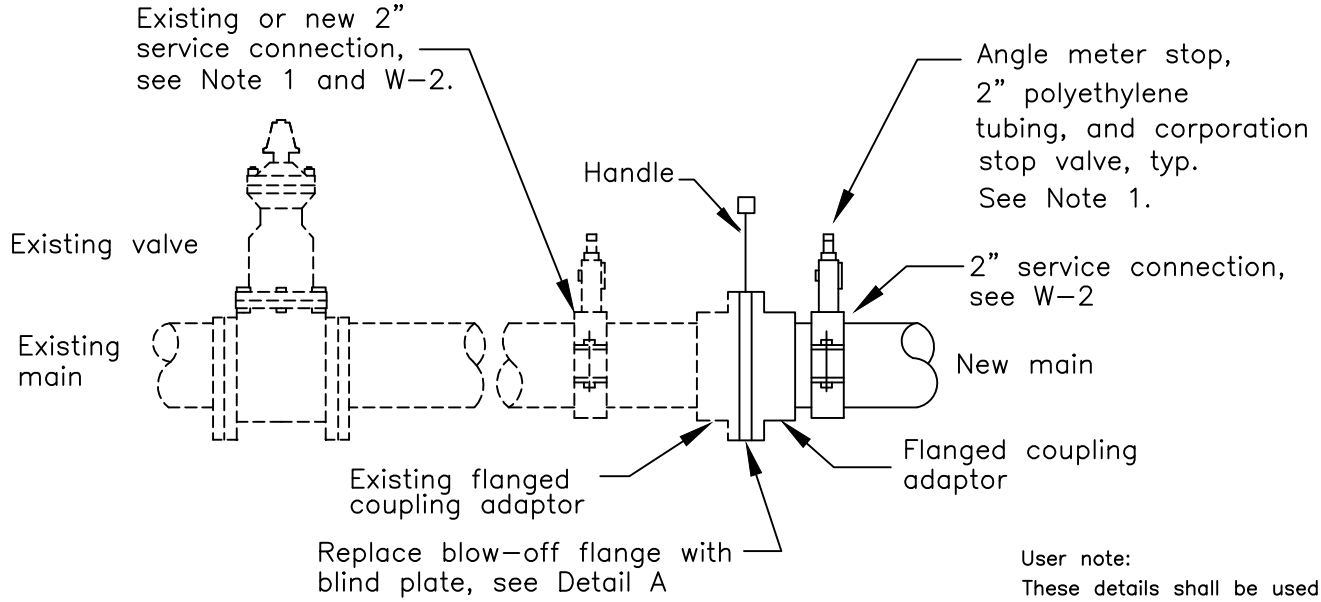

ELEVATION

Temporary Connection with-out Bypass – Secondary Location

User note:

These details shall be used in conjunction with all the City standard details and specifications. Refer to the City standard specifications for the materials, installation, testing, protective coatings, and other requirements.

Date:	By:	Rev:

WO7A.DWG

WATER MAIN TEMPORARY JUMPER CONNECTIONS

CITY OF LIVERMORE
STANDARD DETAIL

Dwn: FY	Date: May-13	No.
Ckd: Spec. Committee	Scale: None	W-7A
City Engineer		

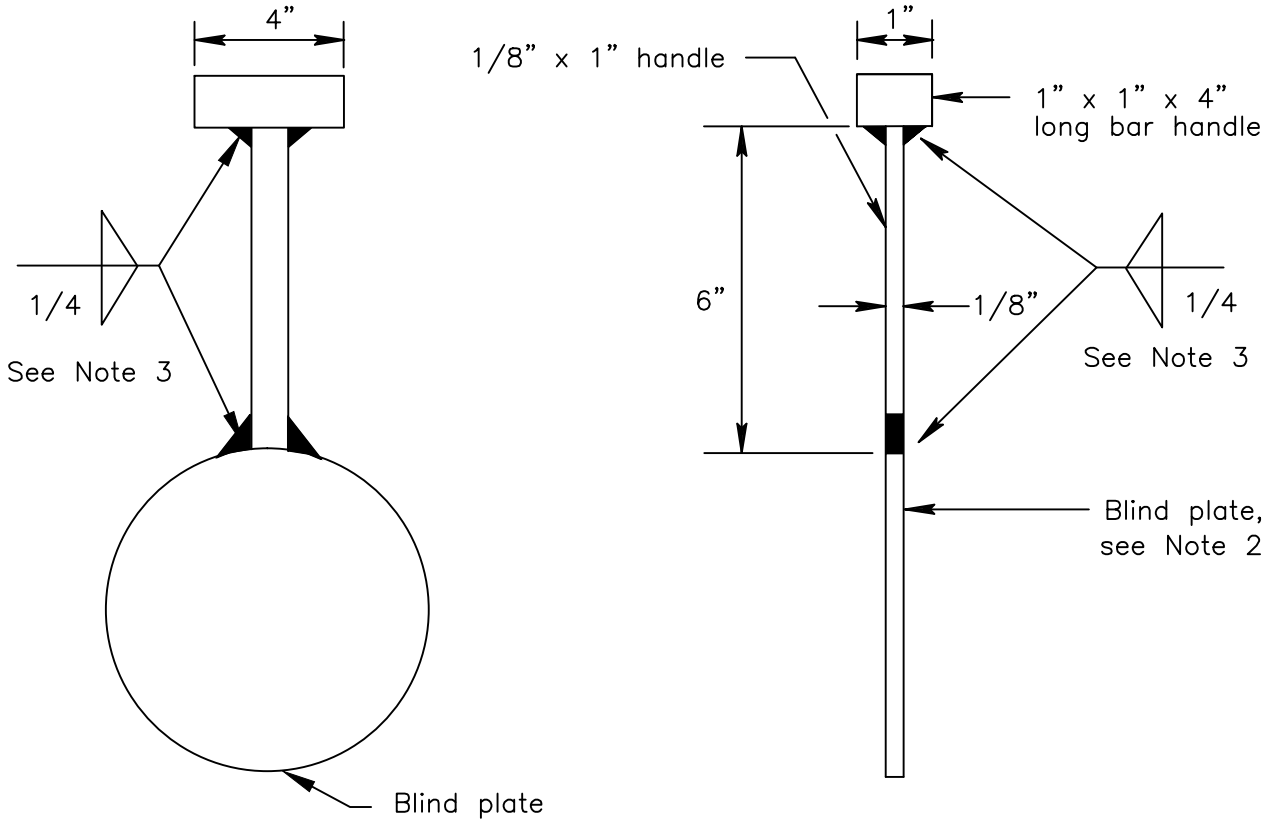

DETAIL A

TEMPORARY BLIND PLATE AND HANDLE

Notes:

1. After acceptance of the new water system: 1) Remove temporary connection assemblies up through corporation stop valves, and replace with plugs of similar material as service connection: 2) Remove blind plate.
2. Blind plate with gaskets (2). Temporary blind plate blank shall be minimum 1/8" thick and shall be 1/4" smaller in diameter than the inside edge of the bolt holes.
3. Blind plate and handle can be one piece or welded.
4. Prior to connection, backflow assembly shall be certified by a City approved tester.

User note:
These details shall be used in conjunction with all the City standard details and specifications. Refer to the City standard specifications for the materials, installation, testing, protective coatings, and other requirements.

Date:	By:	Rev:

WO7B.DWG

WATER MAIN
TEMPORARY JUMPER
CONNECTIONS

CITY OF LIVERMORE
STANDARD DETAIL

Dwn: M–W	Date: May–13	No.
Ckd: Spec. Committee	Scale: None	W–7B

City Engineer

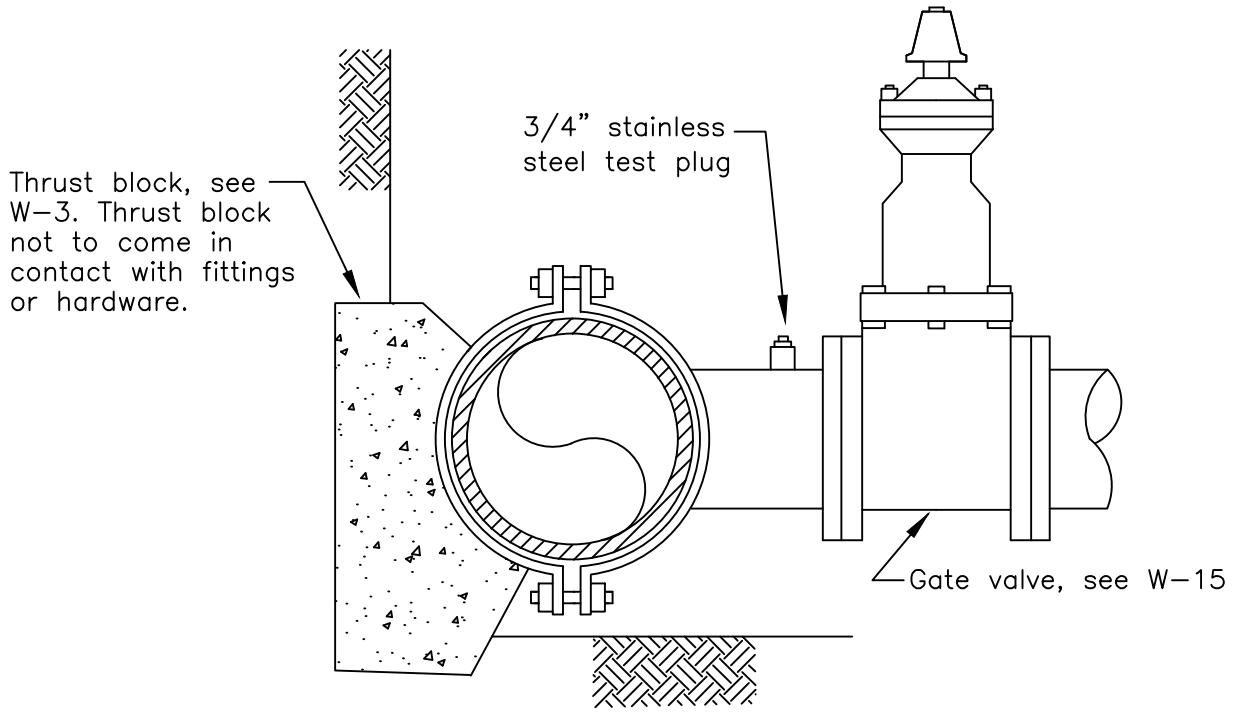

ELEVATION

Notes:

1. For mains larger than 12", field verify existing o.d. pipe dimension for the ENGINEER'S approval before ordering tapping sleeve.
2. Tapping sleeve shall be minimum 3' from joints, connections or fittings.
3. Maximum size tap allowed, without approval of the ENGINEER, shall be main line pipe inside diameter minus 2". Tee fittings are required for 'size' to 'size' connections.
4. All tapping valves to be resilient seat type gate valves with EPDM rubber.
5. Grind 3" valve type "GV", and distance of valve from face of curb (in Roman numerals) in face of curb. Paint white, except for 1) potable fire hydrant or dedicated fire service which shall be painted red, or 2) reclaimed system valves which shall be painted purple.

User note:
These details shall be used in conjunction with all the City standard details and specifications. Refer to the City standard specifications for the materials, installation, testing, protective coatings, and other requirements.

Date:	By:	Rev:

TAPPING SLEEVE AND VALVE, 4" SERVICE AND LARGER (ACP, PVC & DIP)

CITY OF LIVERMORE
STANDARD DETAIL

Dwn: FY	Date: May-13	No.
Ckd: Spec. Committee	Scale: None	W-8

City Engineer

W08.DWG

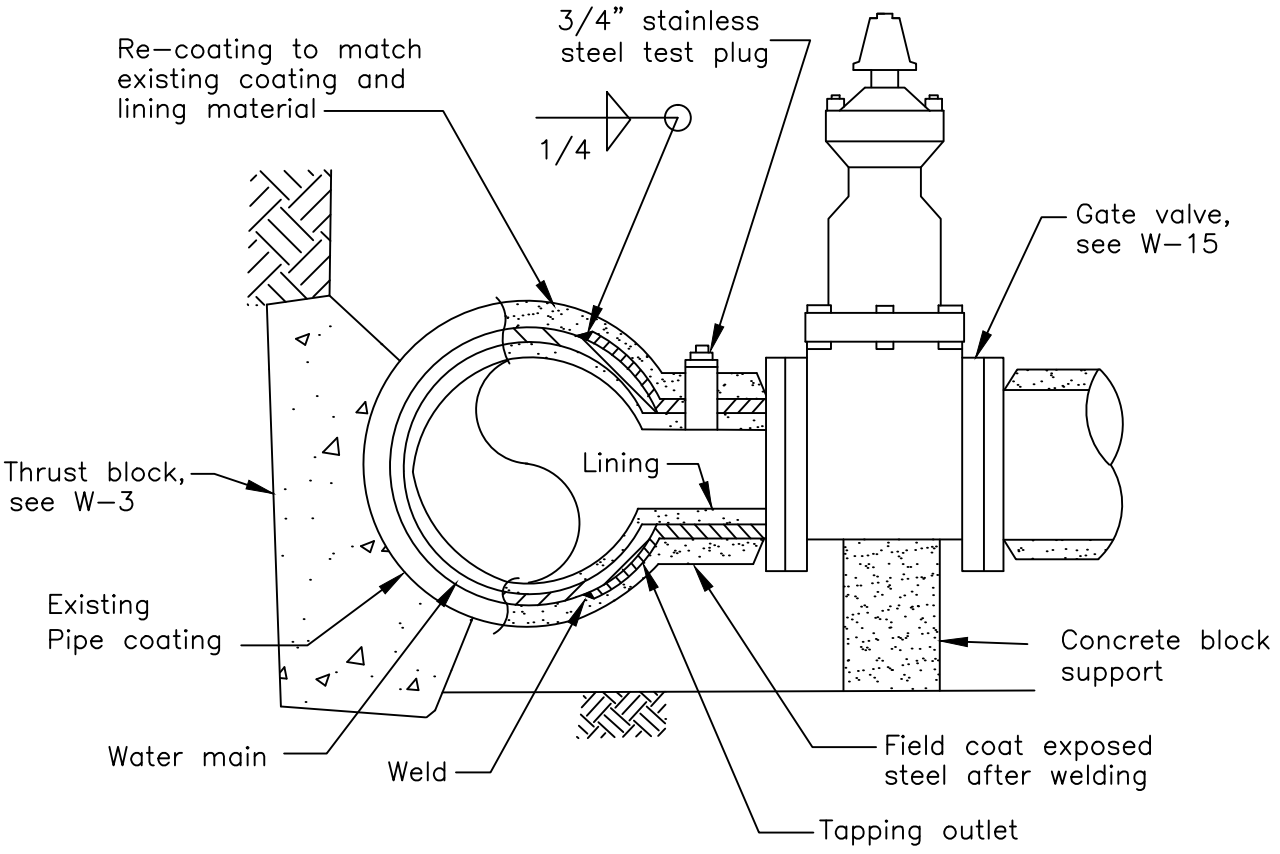

ELEVATION

Notes:

1. For mains larger than 12", verify existing pipe outside dimension with City's Water Resources Division before ordering tapping sleeve.
2. Tapping outlet shall be minimum 3' from joints, connections or fittings.
3. Maximum size tap allowed, without approval of the ENGINEER, shall be main line pipe inside diameter minus 2". Tee fittings are required for 'size' to 'size' connections.
4. All tapping valves to be resilient seat type gate valves.
5. Grind 3" valve type "GV", and distance of valve from face of curb (in Roman numerals) in face of curb. Paint white, exept for 1) potable fire hydrant or dedicated fire service which shall be painted red, or 2) reclaimed system valves which shall be painted purple.
6. All welding per the American Welding Society (AWS) DI.1.
7. For spiral wrapped pipe, tack weld spirals before cutting pipe.
8. On "non-cathodically" protected systems, install anode before re-coating. Submit anode installation design to the ENGINEER for approval.

User note:

These details shall be used in conjunction with all the City standard details and specifications. Refer to the City standard specifications for the materials, installation, testing, protective coatings, and other requirements.

Date:	By:	Rev:

TAPPING OUTLET & VALVE, 4" SERVICE AND LARGER (MLCSP)

CITY OF LIVERMORE
STANDARD DETAIL

Dwn: FY	Date: May-13	No.
Ckd: Spec. Committee	Scale: None	W-9

City Engineer

W09.DWG

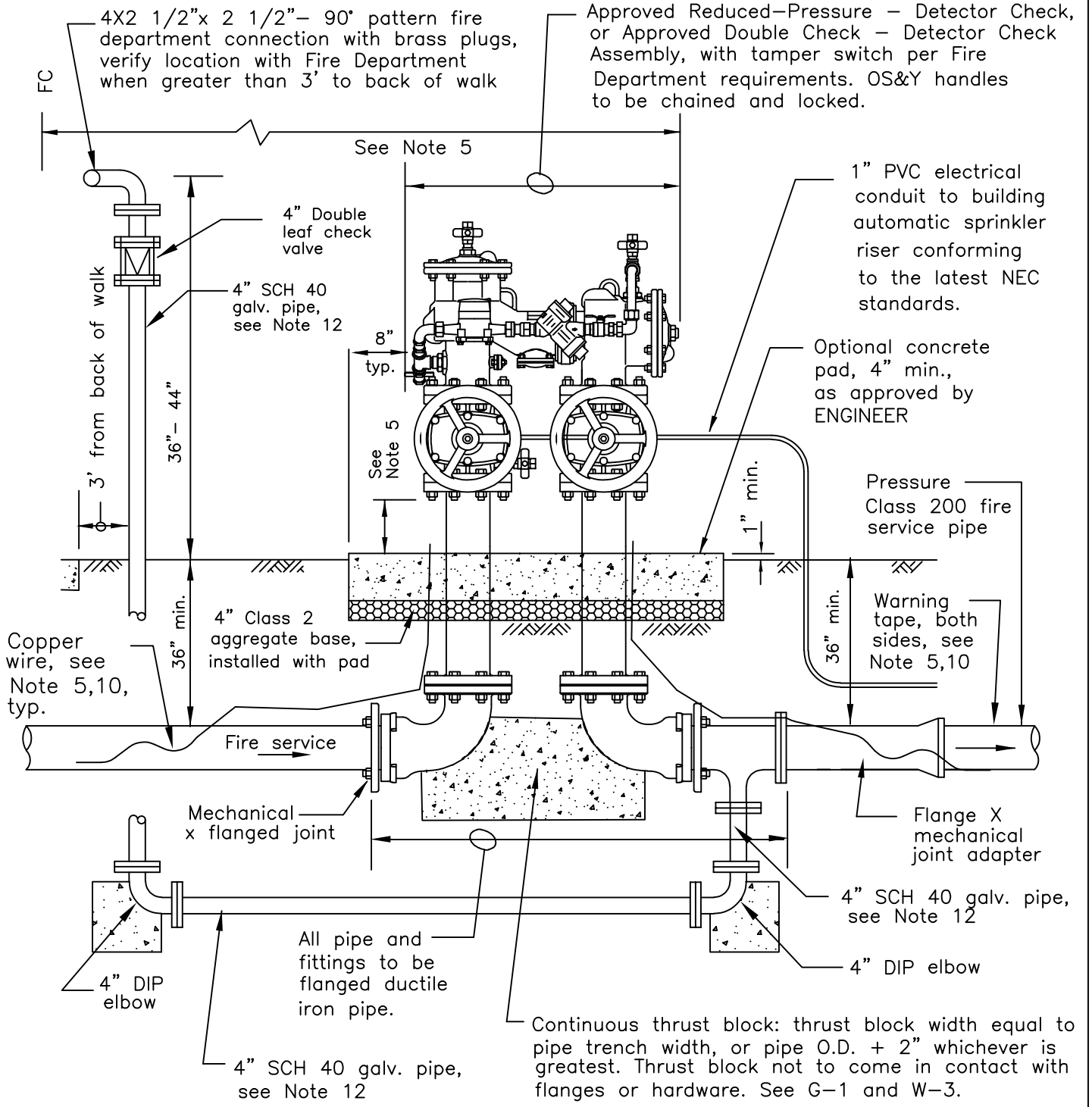

* SEE NOTES ON SHEETS W–10B & W–10C
* For screening requirements see Note 5.
* For on–site installation see Note 7.
* Size & location of fire department connection to be approved by the Fire Department.
* See Note 13 for connection to the City's reclaimed water system.

User note:
These details shall be used in conjunction with all the City standard details and specifications. Refer to the City standard specifications for the materials, installation, testing, protective coatings, and other requirements.

Date:	By:	Rev:

INDUSTRIAL/COMMERCIAL FIRE SERVICE (CLASS 1 THROUGH 6)

CITY OF LIVERMORE
STANDARD DETAIL

Dwn: KY/HI	Date: Sept–22	No.
Ckd: Spec. Committee	Scale: None	W–10A

City Engineer

W10A.DWG

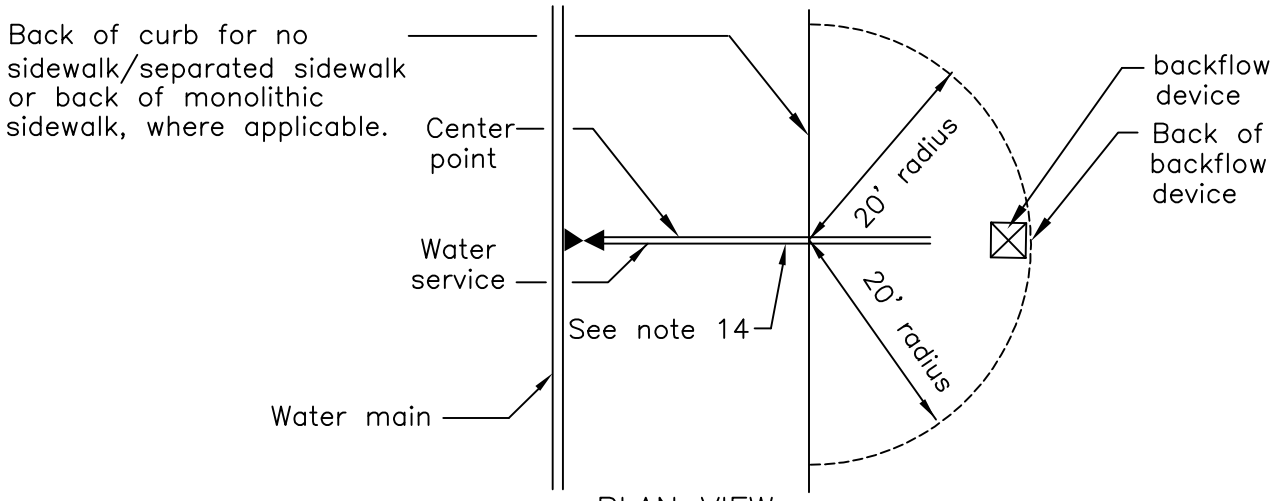

PLAN VIEW

LOCATION OF BACKFLOW PREVENTER

Notes:

1. Pipe size shall be determined by fire flow requirements.
2. Double Check–Detector Check assemblies shall be fully factory assembled.
3. Size and location of fire service, Double Check–Detector Check and Detector Check assemblies shall be approved by the ENGINEER AND FIRE MARSHALL.
4. By–pass trim shall be wrapped with insulation.
5. All aboveground industrial and commercial fire service devices shall be installed in accordance with City of Livermore City Council Resolution No. 93–116, Standard Conditions of Approval for Industrial and Commercial Development, Ordinance No. 1486 and the following:

   Location and placement:
   - locate backflow device as shown in the detail above.
   - install as near the minimum of 12" but not to exceed a maximum of 24" above 1) the street curb elevation, and 2) the grade elevation measured directly below the device;
   - place "DO NOT CONNECT" warning tape over the lateral from the main to the device;
   - devices shall be accessible for servicing.

   Screening requirements:
   - screen from view, except for the fire department connection which is to remain visible, by installing a combination of landscaped berms and/or masonry walls blending with the overall landscaping theme which forms a 100% opaque screen to the normal field of public street traffic; maintain 36" minimum clearance from plants and shrubs.
   - installation subject to design review approval.
   - Paint to match surroundings.

User note:
These details shall be used in conjunction with all the City standard details and specifications. Refer to the City standard specifications for the materials, installation, testing, protective coatings, and other requirements.

Date:	By:	Rev:

INDUSTRIAL/COMMERCIAL FIRE SERVICE NOTES

CITY OF LIVERMORE
STANDARD DETAIL

Dwn: M/W/HI	Date: Sept–22	No.
Ckd: Spec. Committee	Scale: None	W–10B

City Engineer

W10B.DWG

Notes continued :

6. For Class 1 through 6 Fire Service, meter to be purchased from City and installed by City. Meter and by-pass line shall be insulated.

7. For all classes, on the "on-site" service side, the location and requirements for the Fire Department Connection are subject to Fire Department requirements and approval. All on site piping shall be installed in accordance with the City standard specifications.

8. For assemblies installed with concrete pad, additional protective wrap or coating shall be placed around pipe passing through the concrete.

9. For sites with high degrees of hazard, as determined by the Water Resources Division, the Double Check-Detector Check assembly shall be replaced with an approved Reduced Pressure assembly as directed by the Water Resources Division.

10. Service lateral shall have warning tape and copper wire installed along it's entire length up to the backflow prevention device.

11. Access to fire department connections to remain accessible and fire lane to be posted per City and Fire Department standards.

12. All underground SCH 40 galv. pipe shall be wrapped with 10 mil. protective tape or polyethylene encasement. Above ground pipe shall be wrapped with 10 mil. protective tape.

13. Recycled water:
    - See the latest City of Livermore "Guidelines for the use of Recycled Water" for installation and additional information.
    - Pressure Class 200 pipe shall be used when connecting to the City's recycled water system.

14. The City's maintenance jurisdiction is up to the property line.

User note:
These details shall be used in conjunction with all the City standard details and specifications. Refer to the City standard specifications for the materials, installation, testing, protective coatings, and other requirements.

Date:	By:	Rev:

W10C.DWG

INDUSTRIAL/COMMERCIAL FIRE SERVICE NOTES

CITY OF LIVERMORE
STANDARD DETAIL

Dwn: W/KY/HI	Date: Apr-23	No.
Ckd: Spec. Committee	Scale: None	W-10C

City Engineer

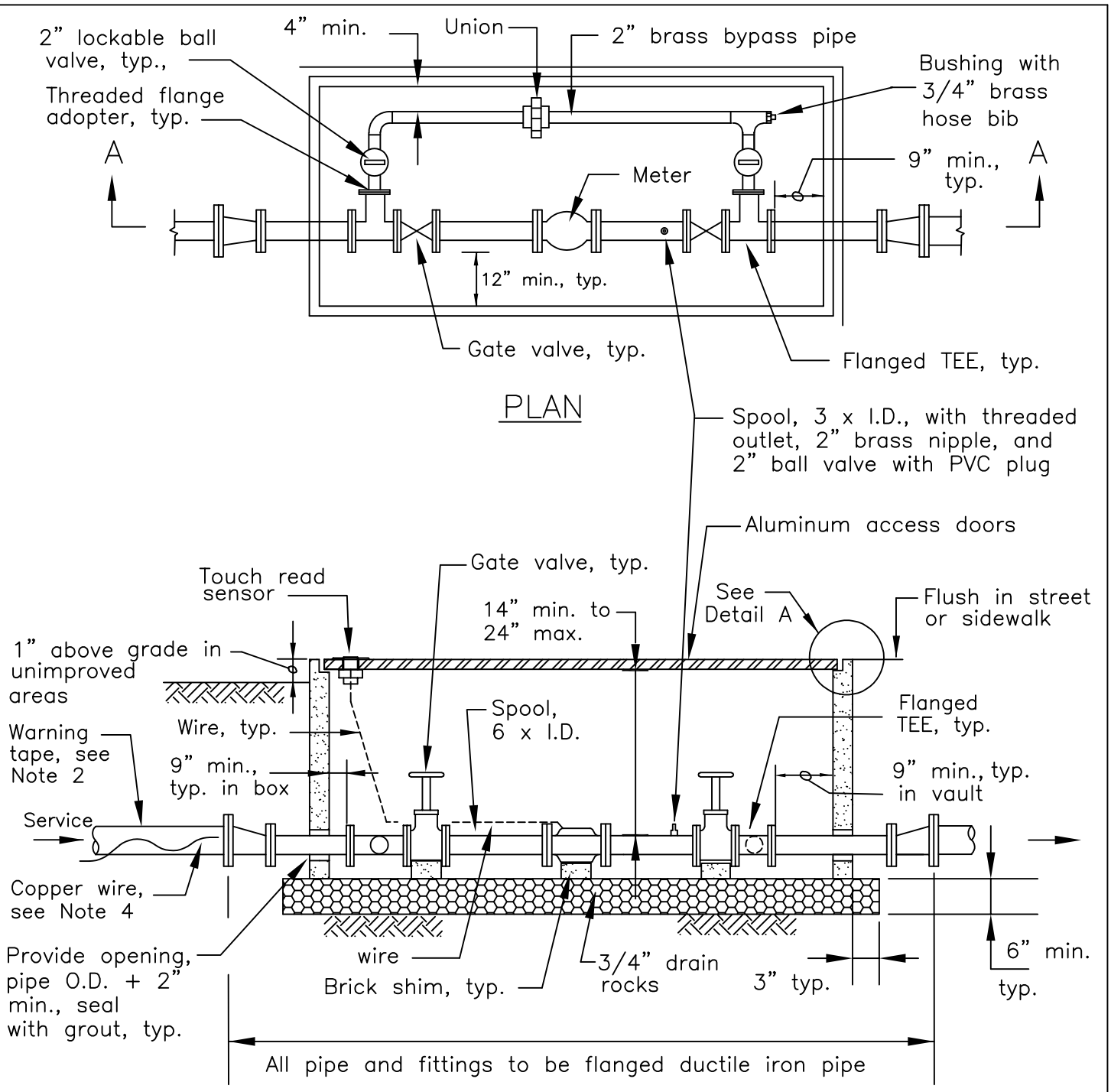

Notes:

1. Meters larger than 3" to be installed in vault with access doors per spec. 055000 2.3A and a permanent bypass line.
2. Service lateral shall have warning tape and copper wire installed along its entire length, see W–2.
3. If necessary, raise W line at meter to be a min. 14" to 24" max. from access doors.

User note:

These details shall be used in conjunction with all the City standard details and specifications. Refer to the City standard specifications for the materials, installation, testing, protective coatings, and other requirements.

Date:	By:	Rev:

TURBINE TYPE METER 3" AND LARGER

CITY OF LIVERMORE
STANDARD DETAIL

Dwn: M–W/KY/HI	Date: Apr–23	No.
Ckd: Spec. Committee	Scale: None	W–11

City Engineer

W11.DWG

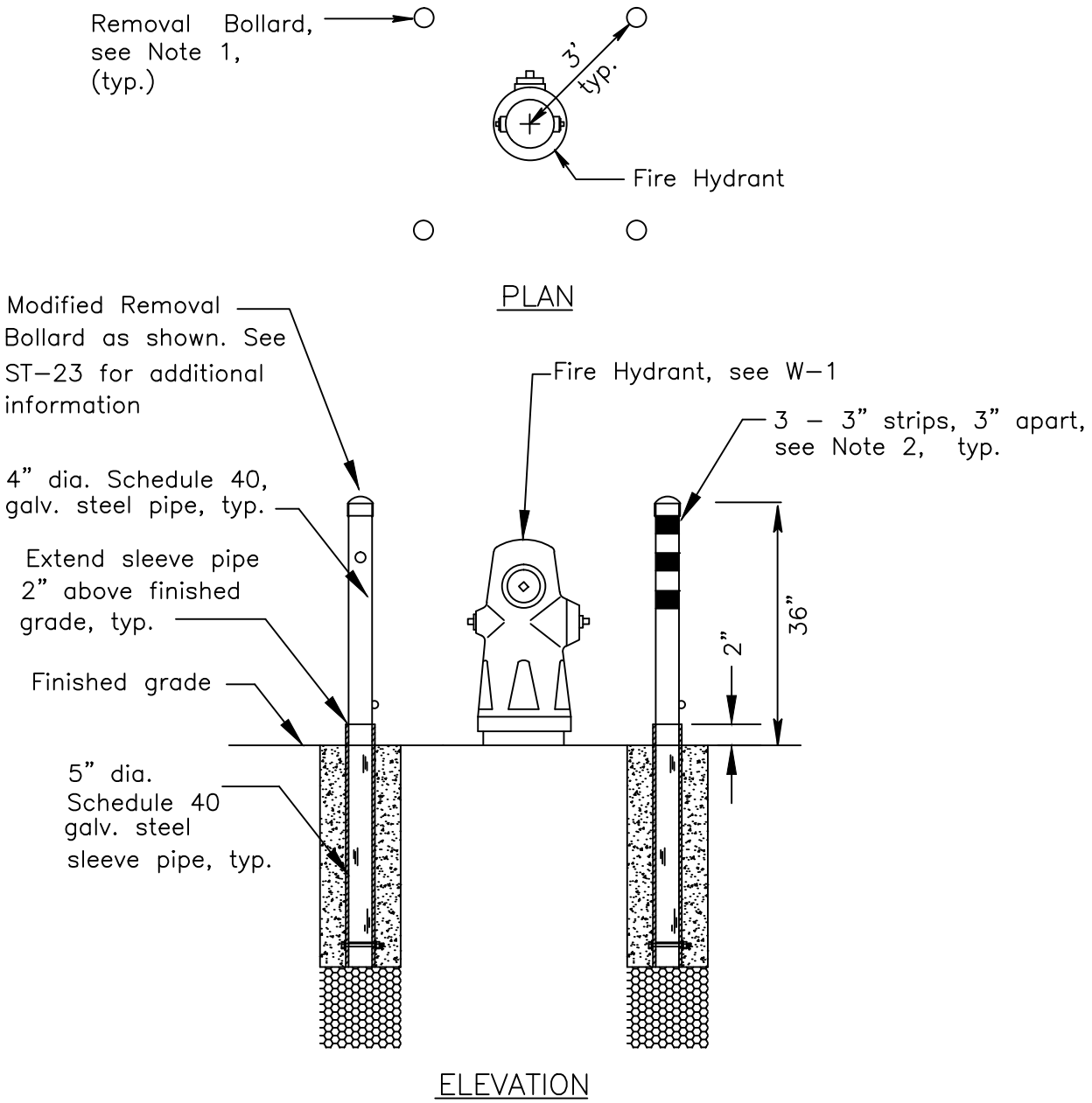

Notes:

1. Fire Hydrant outlets NOT to be blocked by bollards.
2. Paint bollards per the City Standard Specifications, place 3 - 3" strips of 45° grey/white reflective barricade tape at top of bollard.
3. Bollard shall be installed as required by the ENGINEER
4. See ST-23 for additional information on the Removable Bollards.

User note:
These details shall be used in conjunction with all the City standard details and specifications. Refer to the City standard specifications for the materials, installation, testing, protective coatings, and other requirements.

Date:	By:	Rev:

FIRE HYDRANT
GUARD BOLLARD

CITY OF LIVERMORE
STANDARD DETAIL

Dwn: M-W/KY	Date: May-13	No.
Ckd: Spec. Committee	Scale: None	W-12

City Engineer

W12.DWG

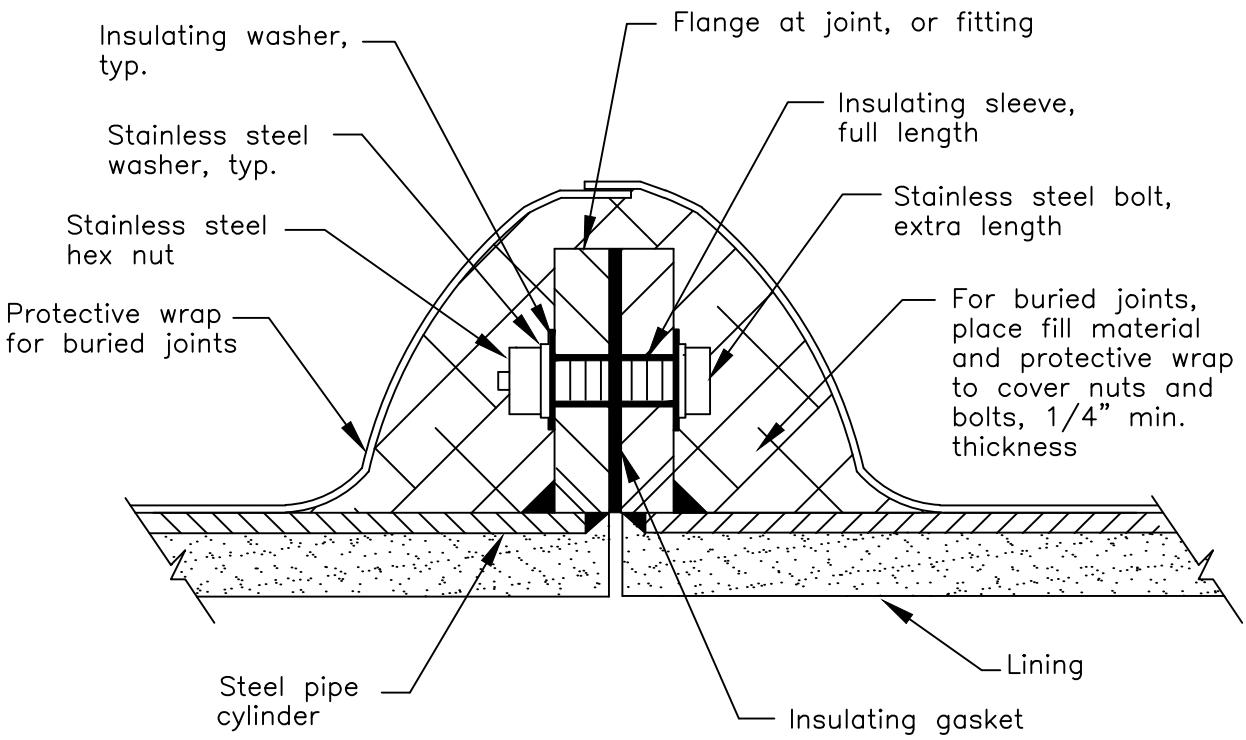

INSULATING FLANGE

Notes:

1. Filler and wrappings may be deleted for above–grade insulating joints.
2. Insulating gasket shall be appropriate for "water" service and shall be the same pressure rating as the flange.
3. For exposed joints, coat flanges (except machined flange face) same as pipe. Do not coat bolts or washers.
4. "Fill" material shall be as recommended by the manufacturer.

User note:
These details shall be used in conjunction with all the City standard details and specifications. Refer to the City standard specifications for the materials, installation, testing, protective coatings, and other requirements.

Date:	By:	Rev:	INSULATING FLANGE	CITY OF LIVERMORE STANDARD DETAIL		
				Dwn: M–W	Date: May–13	No.
				Ckd: Spec. Committee	Scale: None	W–13
				City Engineer		

W13.DWG

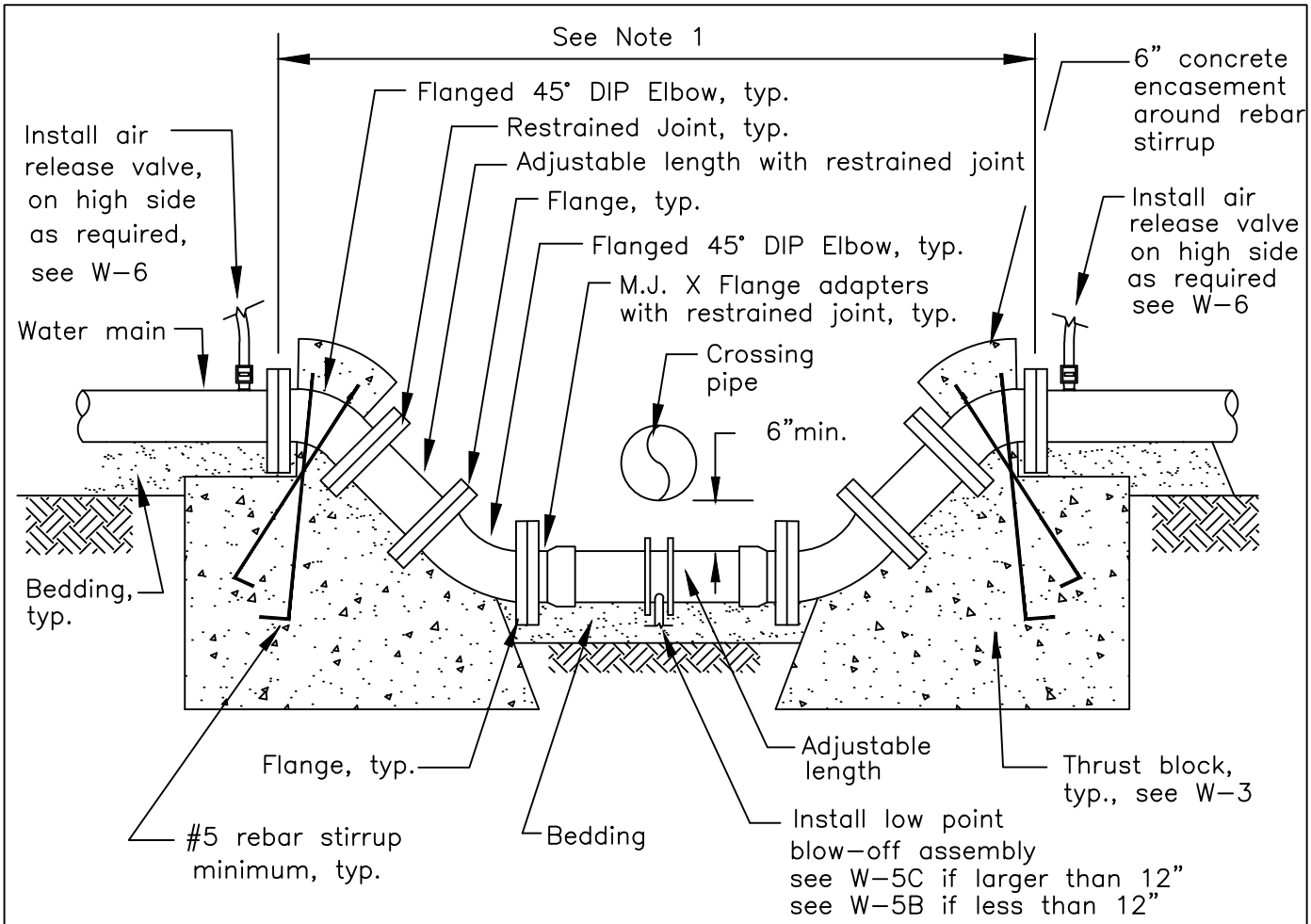

M.J. = MECHANICAL JOINT

VERTICAL ELEVATION

Notes:

1. On ACP, PVC, and DIP pipe all material shall be flanged ductile iron pipe. On steel pipe all material shall be flanged steel.
2. Use building paper or foam board to prevent direct contact of concrete with pipe fittings, flanges, or nuts and bolts. See W-3.
3. Water line "off-set" is allowed only when all three of the following conditions are met:
   a. Crossing pipe is a gravity line,
   b. "off-set" line invert is more than 6' below finish grade, and
   c. only when approved by ENGINEER.
4. Install "Low Point Blow-off" at low point of offset. See W-5C.
5. For New Water line offset under an existing sanitary sewer pipe, the New Water line must comply with this detail and G-2.

User note:
These details shall be used in conjunction with all the City standard details and specifications. Refer to the City standard specifications for the materials, installation, testing, protective coatings, and other requirements.

Date:	By:	Rev:

WATER LINE OFFSET

CITY OF LIVERMORE
STANDARD DETAIL

Dwn: FY	Date: May-13	No.
Ckd: Spec. Committee	Scale: None	W-14

City Engineer

W14.DWG

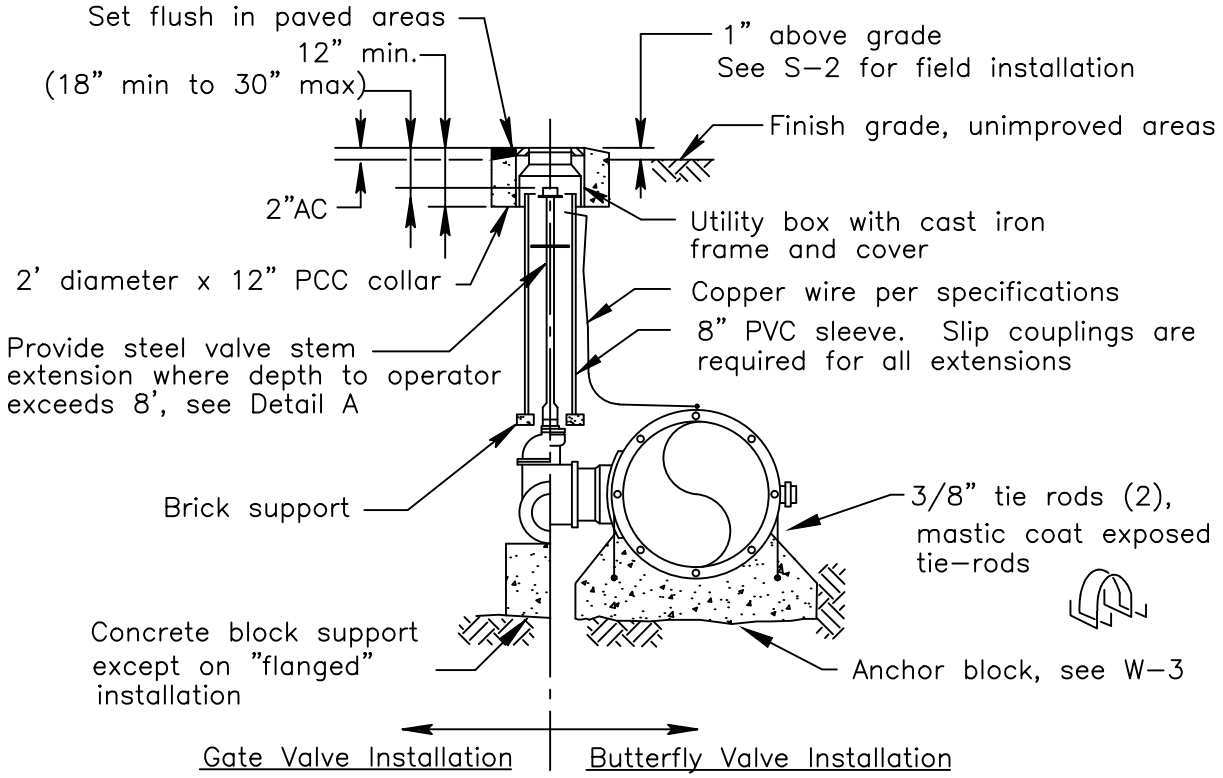

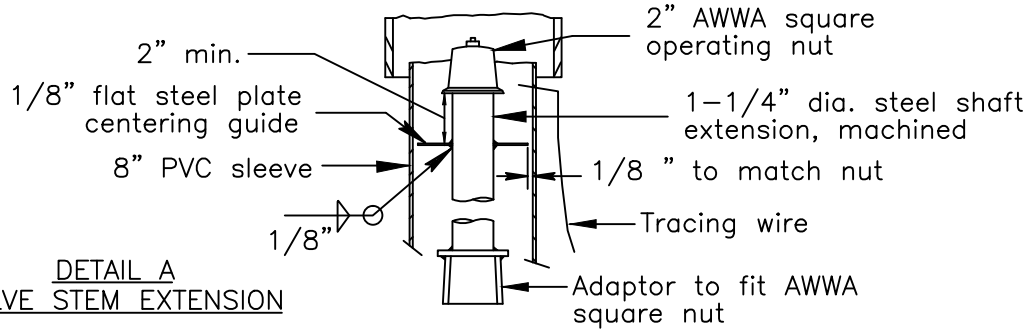

DETAIL A
VALVE STEM EXTENSION

Notes:

1. Anchor block is not required with flanged butterfly valve.
2. Install butterfly valve with operating nut on curb side of main.
3. Grind 3" valve type "BV", "GV", and distance of valve from face of curb (in Roman numerals) in face of curb. Paint red for fire hydrant and dedicated fire service, paint purple for reclaimed water, paint white for all others. If valve is on a dedicated fire service grind 3" "W" on top of curb over lateral, paint white for potable systems and purple for reclaimed systems.
4. Main line valve cover to be painted Handicap blue. On recycled water system, paint valve cover purple per the City Standard Specifications.

User note:
These details shall be used in conjunction with all the City standard details and specifications. Refer to the City standard specifications for the materials, installation, testing, protective coatings, and other requirements.

Date:	By:	Rev:

BURIED VALVE

14" AND LARGER BUTTERFLY VALVE
12" AND SMALLER GATE VALVE

CITY OF LIVERMORE
STANDARD DETAIL

Dwn: FY	Date: May-13	No.
Ckd: Spec. Committee	Scale: None	W-15

City Engineer

W15.DWG

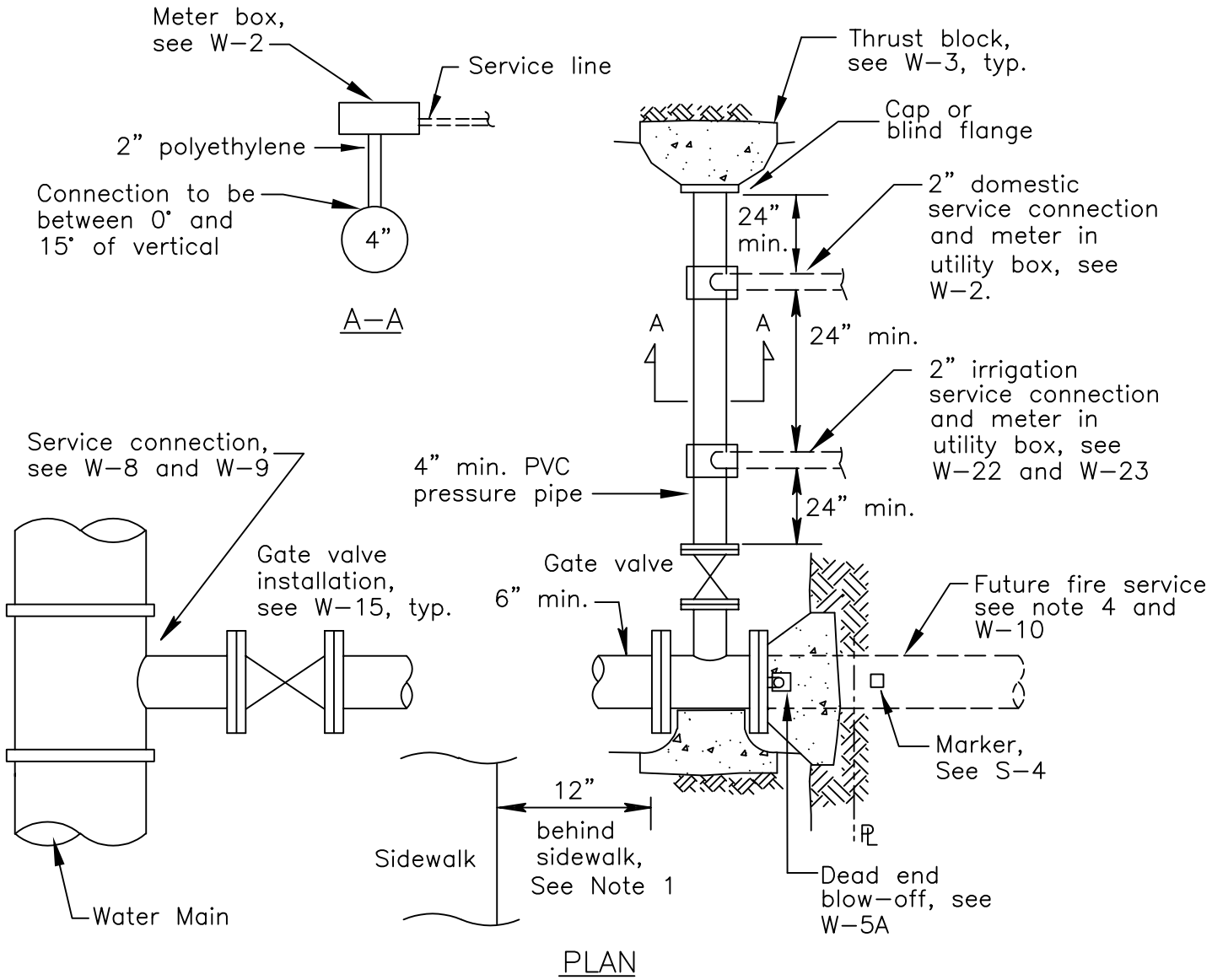

Notes:

1. Grind 3" high "W" on top of curb over service and paint white. Grind 3" high valve type (i.e. "BV", "GV", etc.) and distance of valve to face of curb (in Roman numerals) in face of curb and paint white.
2. All pipes shall have blue warning tape and copper wire, see W-2.
3. For Commercial/Industrial Joint Domestic/Fire Service installation with MULTIPLE on-site domestic or irrigation service lines, install as shown above, for installation with only ONE on-site domestic or irrigation service line, connect to Fire service line in accordance with W-2.
4. The City's Maintenance jurisdiction is up to the property line.
5. Can install saddle on fire service, if only one service(no tee, no gate)

User note:
These details shall be used in conjunction with all the City standard details and specifications. Refer to the City standard specifications for the materials, installation, testing, protective coatings, and other requirements.

Date:	By:	Rev:

W16.DWG

COMMERCIAL/INDUSTRIAL JOINT DOMESTIC/ FIRE SERVICE

CITY OF LIVERMORE
STANDARD DETAIL

Dwn: M/W/HI	Date: Sept-22	No.
Ckd: Spec. Committee	Scale: None	W-16

City Engineer

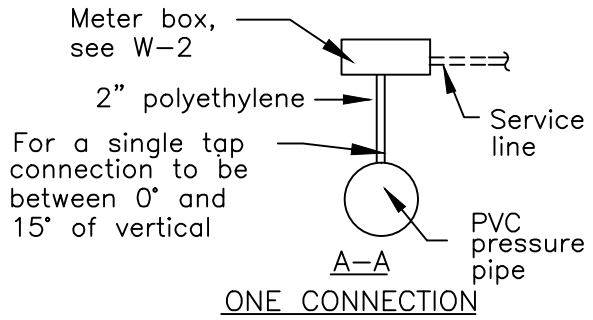

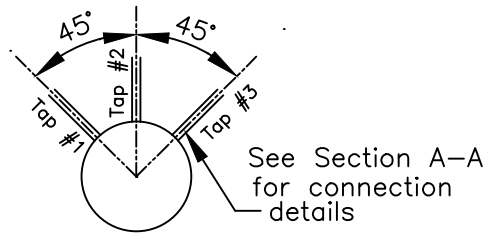

B–B

TWO OR MORE CONNECTIONS

(SEE NOTE 4)

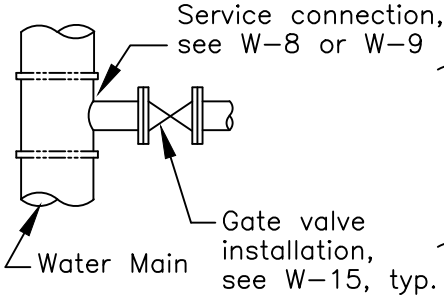

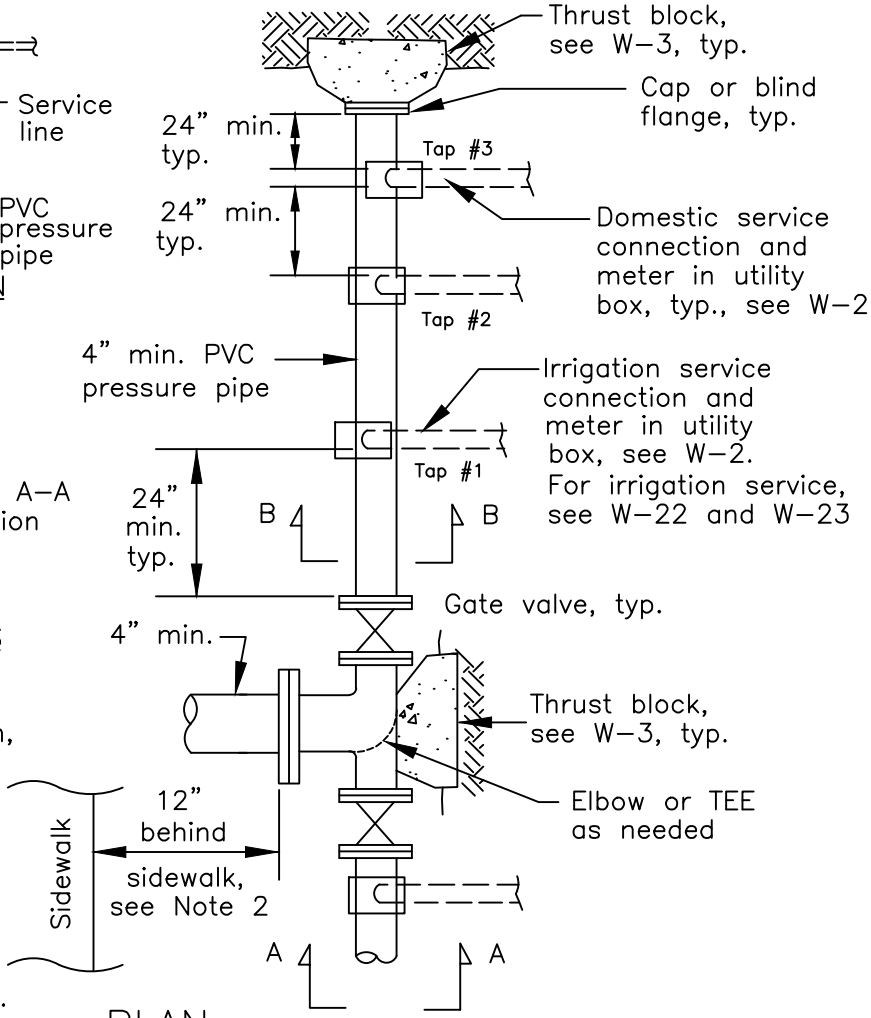

Notes:

1. Manifold water meter installation is for domestic service only.
2. Grind 3" high "W" on top of curb over service and paint white. Grind 3" high valve type (i.e. "BV" "GV", etc.) and distance of valve to face of curb (in Roman numerals) in face of curb and paint white.
3. All pipes shall have blue warning tape and copper wire, see W–2.
4. For two or more taps on one length of PVC pipe, the taps should be staggered and no closer than 24" apart, measured longitudinally.

User note:

These details shall be used in conjunction with all the City standard details and specifications. Refer to the City standard specifications for the materials, installation, testing, protective coatings, and other requirements.

Date:	By:	Rev:

W17.DWG

MANIFOLD WATER METER INSTALLATION

CITY OF LIVERMORE
STANDARD DETAIL

Dwn: M–W	Date: May–13	No.
Ckd: Spec. Committee	Scale: None	W–17

City Engineer

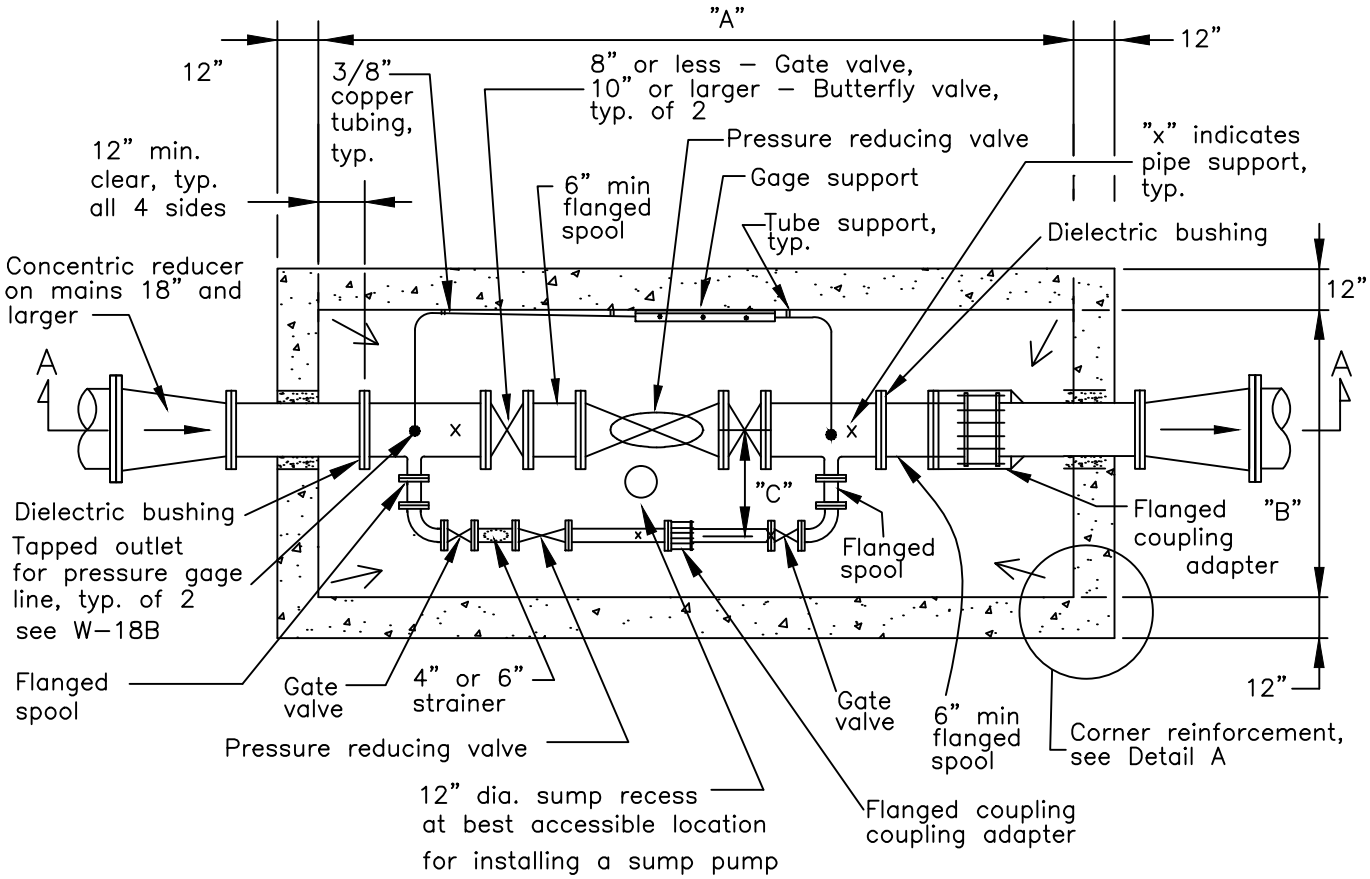

PLAN

DETAIL A

Corner Reinforcement Overlap

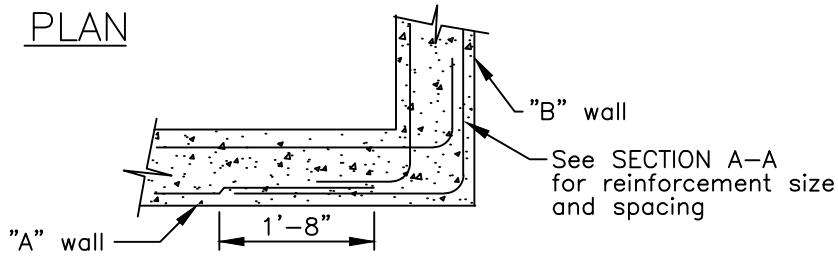

Vault Size					
Main Size	Vault Piping	"A" min.	"B" min.	"C" min.	Bypass Piping and valve size
18"	16"	16'–0"	7'–0"	2'–1"	6"
16"	16"	16'–0"	7'–0"	2'–1"	6"
14"	14"	14'–0"	7'–0"	2'–1"	6"
12"	12"	12'–0"	6'–0"	2'–1"	see Note 5
10"	10"	12'–0"	4'–6"	1'–6"	4"
8"	8"	10'–6"	4'–6"	1'–6"	4"
6"	6"	10'–6"	4'–6"	1'–6"	4"

User note:
These details shall be used in conjunction with all the City standard details and specifications. Refer to the City standard specifications for the materials, installation, testing, protective coatings, and other requirements.

Date:	By:	Rev:

W18A.DWG

PRESSURE REDUCING STATION

CITY OF LIVERMORE
STANDARD DETAIL

Dwn: FY	Date: May–13	No.
Ckd: Spec. Committee	Scale: None	W–18A

City Engineer

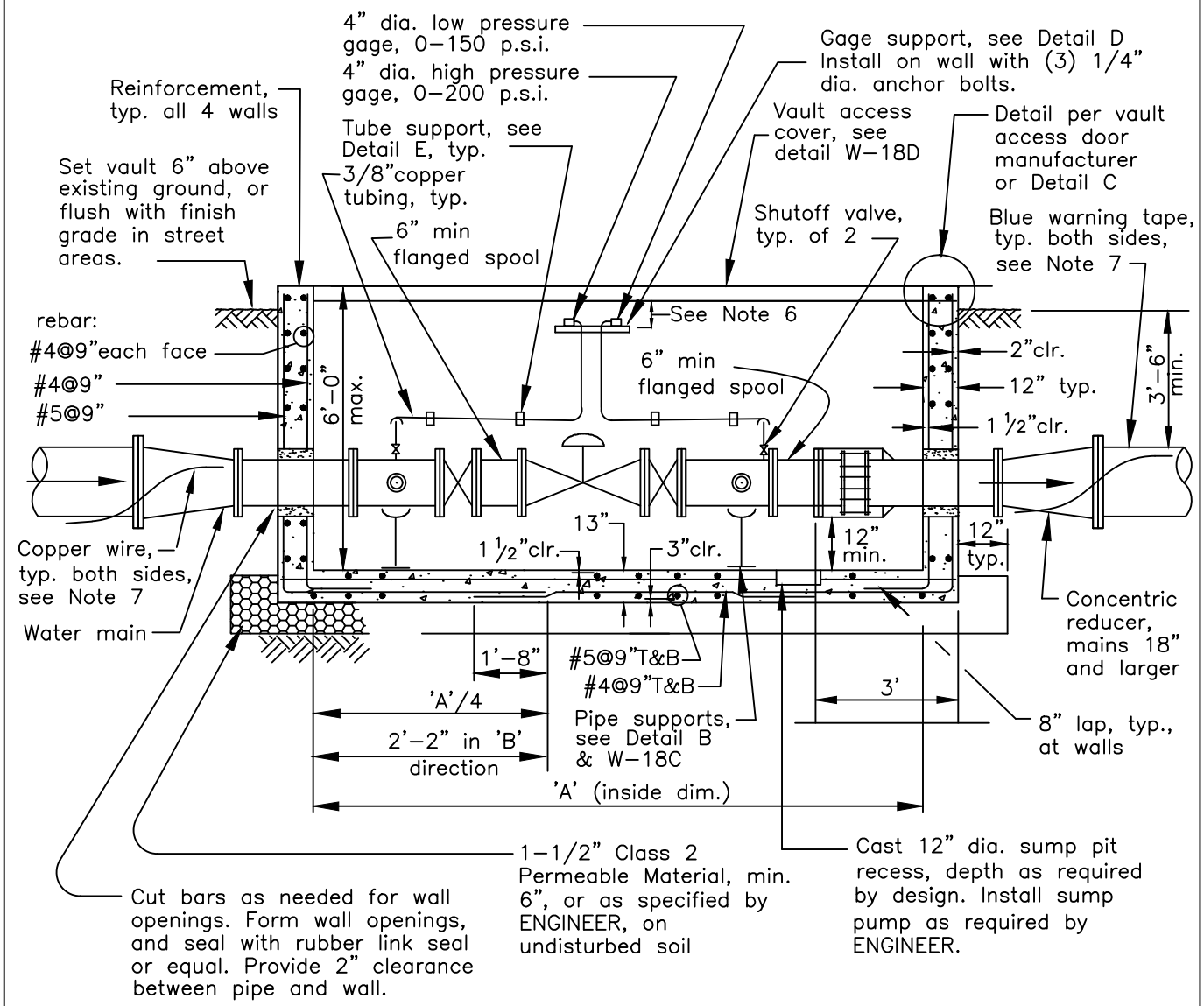

SECTION A–A

ASSUMED DESIGN CRITERIA, SEE NOTE 3:

Lateral soil pressure: 75 pcf (equivalent fluid)
Traffic surcharge: 150 psf (uniform)
No ground water
H–20 traffic loading on top of vault
allowable soil bearing: 1000 psf
f'c=3000 psi min.
Grade 40 or 60 Reinforcement
Seismic: zone 4,
increase in soil pressure: 24H (plf)
applied at 0.6H

User note:
These details shall be used in conjunction with all the City standard details and specifications. Refer to the City standard specifications for the materials, installation, testing, protective coatings, and other requirements.

Date:	By:	Rev:	PRESSURE REDUCING STATION	CITY OF LIVERMORE STANDARD DETAIL		
				Dwn: FY	Date: May–13	No.
				Ckd: Spec. Committee	Scale: None	W–18B
				City Engineer		

W18B.DWG

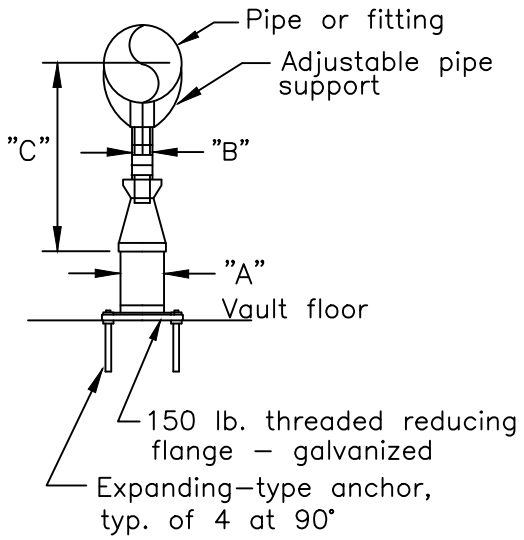

ADJUSTABLE PIPE SUPPORT APPROXIMATE DIMENSIONS IN INCHES				
PIPE SIZE	"A"	"B"	"C" MIN.	"C" MAX.
4	3	2–1/2	10–1/4	14
6	3	2–1/2	11–5/8	15–1/4
8	3	2–1/2	13–5/8	16–1/2
10	3	2–1/2	14–5/8	18–1/4
12	3	2–1/2	15–5/8	19–3/4
14	4	3	18–7/8	20–3/4
16	4	3	19–7/8	22–1/4
18	6	3–1/2	21–1/4	24

ADJUSTABLE PIPE SUPPORT
DETAIL B

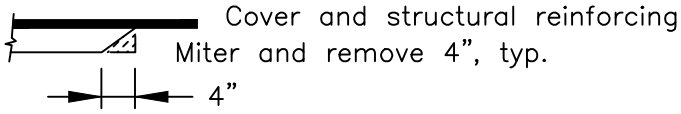

For steel checker plate cover

DETAIL C

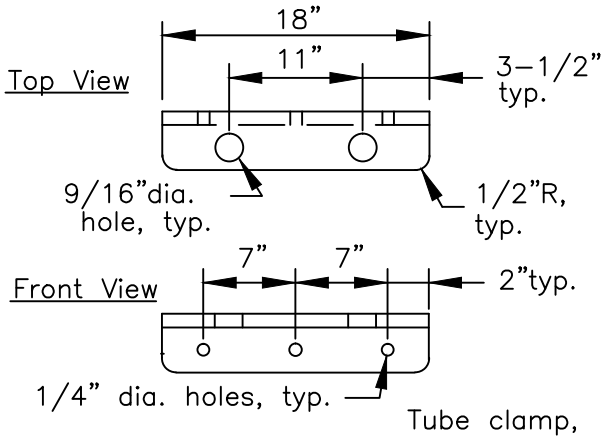

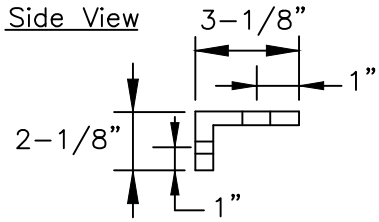

1/8" aluminum plate
Gage support

DETAIL D

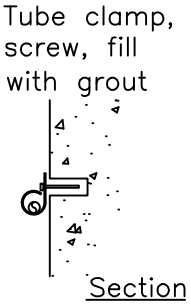

Tube support

DETAIL E

Notes:

1. Pipe fittings, valves, tees and cocks for pressure gauges to be brass, bronze, or copper.
2. Slope floor of vault to drain to sump pit, min, 1% and max. 2%.
3. Mains larger than 18" and specific site conditions that do not meet "ASSUMED DESIGN CRITERIA" per W–18A require custom designed box and assembly as approved by ENGINEER
4. For Pressure Reducing Stations installed in non–street areas, install 4 guard posts, one at each corner, 12" clear from outside edge of vault wall, and as directed by ENGINEER. Installation of guard posts per W–12.
5. Min. 4", or 6" as determined by ENGINEER and Water Resources Division.
6. Mounting height of gauges shall be as specified by the Water Resources Division.
7. Water main shall have warning tape and copper wire installed along it's entire length up to the vault, see W–2
8. For pressure reducing stations, installed in steel main areas, a bonding jumper will be installed around the station for cathodic protection.

User note:
These details shall be used in conjunction with all the City standard details and specifications. Refer to the City standard specifications for the materials, installation, testing, protective coatings, and other requirements.

Date:	By:	Rev:

PRESSURE REDUCING STATION

CITY OF LIVERMORE
STANDARD DETAIL

Dwn: M–W	Date: May–13	No.
Ckd: Spec. Committee	Scale: None	W–18C

City Engineer

W18C.DWG

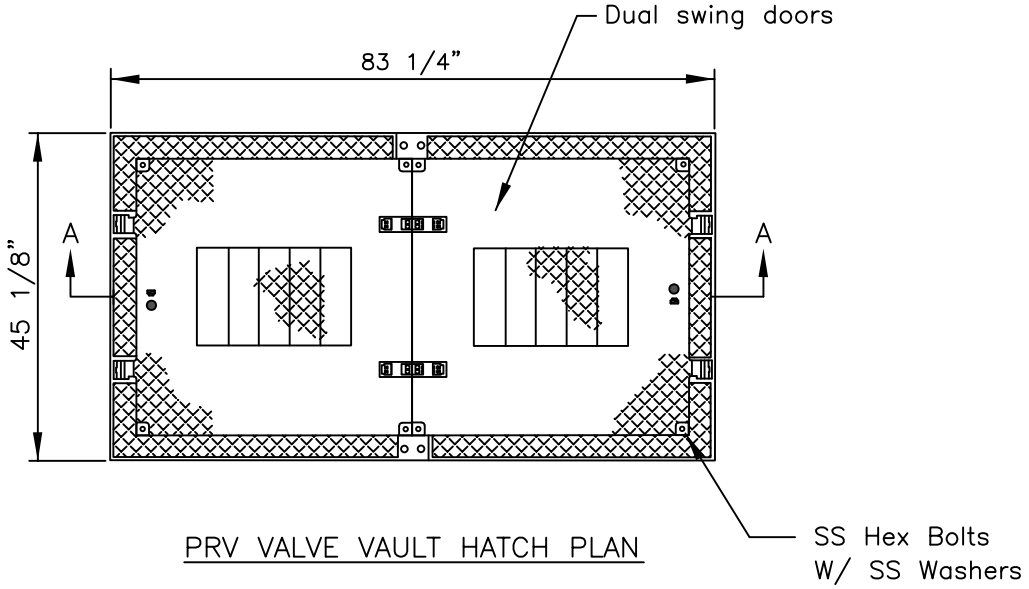

PRV VALVE VAULT HATCH PLAN

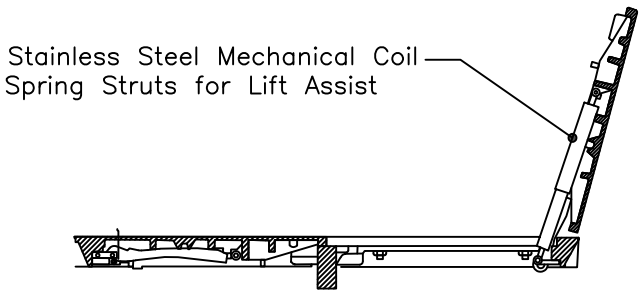

SECTION A–A

NOTES:

1. Hatch shall be mode ej 8197Z2PT 8217APT Assembly or equal
2. Dual Swing Doors
3. SS Hex Bolts W/ SS Washers
4. MPIC® Multi–Tool Pickbar
5. Stainless Steel Mechanical Coil Spring Struts for Lift Assist
6. Design Load Heavy Duty
7. Design Features: Materials – Hatch Cover (Ductile Iron), Hatch Frame (Ductile Iron).

User note:
These details shall be used in conjunction with all the City standard details and specifications. Refer to the City standard specifications for the materials, installation, testing, protective coatings, and other requirements.

Date	By	Rev.

W18d-r.dwg

PRV VALVE VAULT HATCH

CITY OF LIVERMORE
STANDARD DETAIL

Dwn: HI	Date: Nov–22	NO.
Ckd: Spec. Committee	Scale: NONE	W–18D

City Engineer

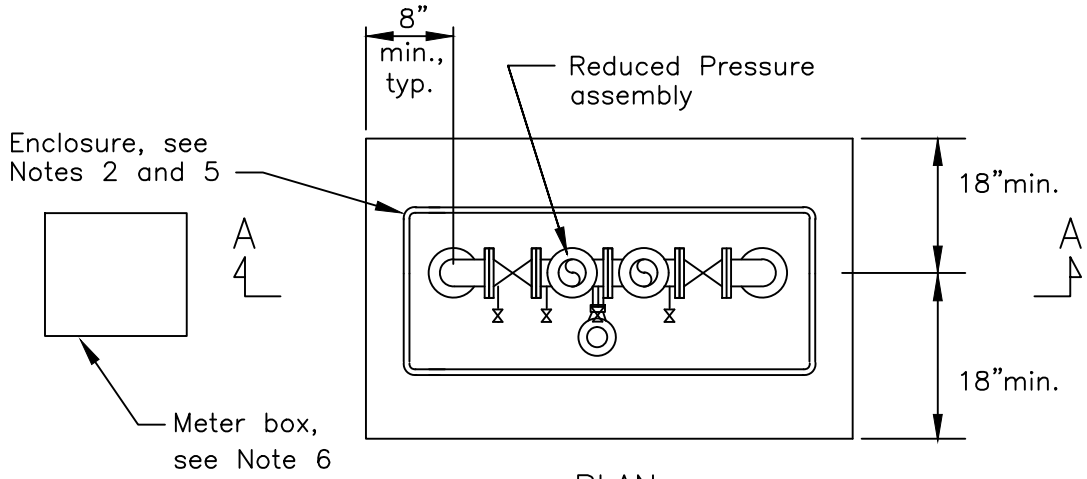

PLAN

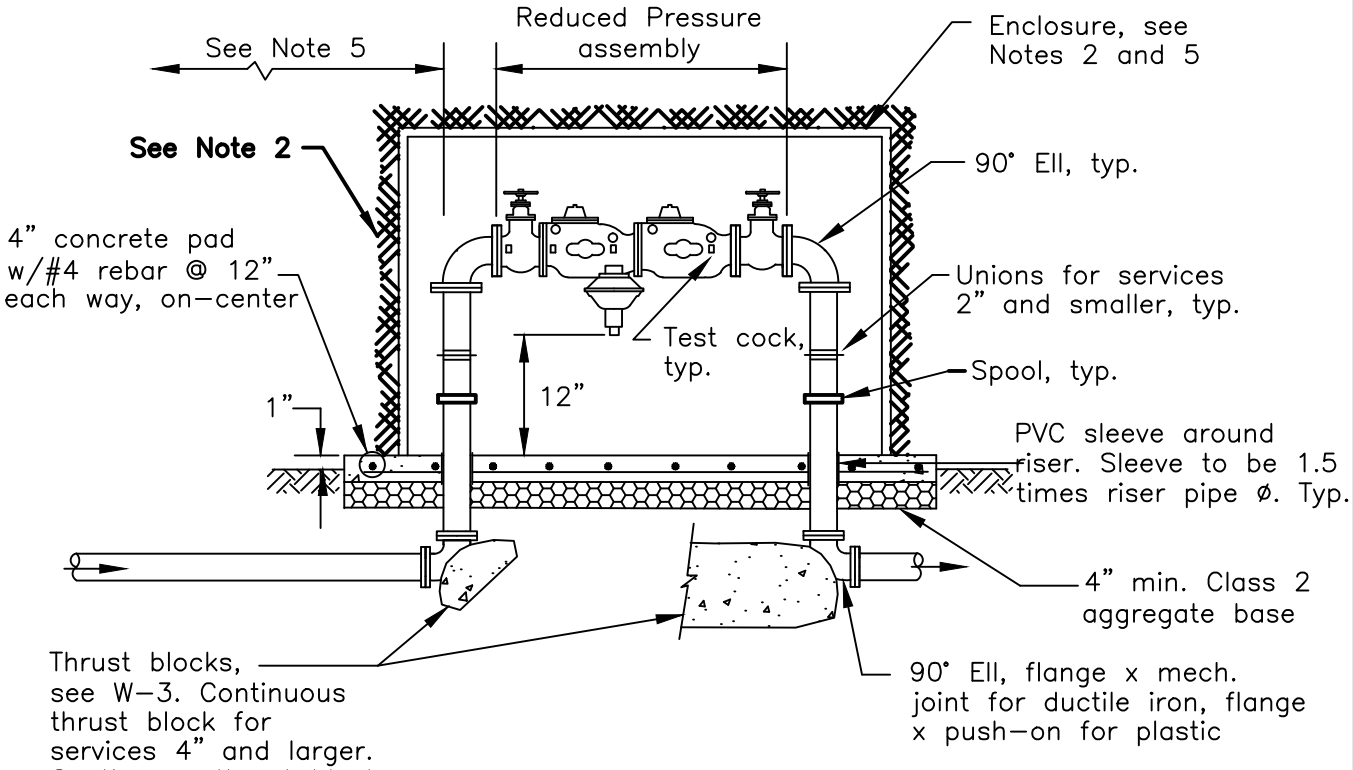

SECTION A–A

For screening requirements see Note 5.

User note:
These details shall be used in conjunction with all the City standard details and specifications. Refer to the City standard specifications for the materials, installation, testing, protective coatings, and other requirements.

Date:	By:	Rev:

W22A.DWG

REDUCED PRESSURE BACKFLOW PREVENTER

CITY OF LIVERMORE
STANDARD DETAIL

Dwn: FY	Date: May–13	No.
Ckd: Spec. Committee	Scale: None	W–22A

City Engineer

Notes:

1. Reduced Pressure Backflow assemblies shall be fully factory assembled.
2. City owned Insulated enclosure (or an enclosure with an insulating blanket) is required for backflow preventers of 2" size and smaller. (Refer to Spec section 331213)
3. Concrete pad shall be sized to accommodate the insulated enclosure. Where an enclosure is not required, provide the minimum dimensions and clearances shown. Concrete pad may be deleted on private service installations.
4. Piping materials:
   - 2" and smaller: Brass, bronze or copper
     Threaded insulating bushing is required on installations with dissimilar materials.
   - Larger than 2": Flanged Ductile iron

   All pipe materials shall have protective wrap or coating around pipe passing through 4" concrete pad.
5. All aboveground irrigation service devices shall be installed as follows:
   Location and placement:
   - locate within 5' of water meter;
   - install at 12" above grade measured directly below the device;
   - place "DO NOT CONNECT" warning tape over the lateral from the meter to the device;
   - devices shall be accessible for servicing.

   In accordance with City of Livermore City Council Resolution No. 93-116, Standard Conditions of Approval for Industrial and Commercial Development, screening requirements shall be as follows:
   - screen from public street by installing a combination of landscaping, berms, and/or masonry walls;
   - installation subject to design review approval.
6. See W-2 for meter and service connection. Location subject to the approval of CITY ENGINEER.
7. Service lateral for Reduced Pressure Backflow Preventer assembly on a fire service line shall have blue warning tape and copper wire installed along it's entire length up to meter, see W-2.

User note: These details shall be used in conjunction with all the City standard details and specifications. Refer to the City standard specifications for the materials, installation, testing, protective coatings, and other requirements.

Date:	By:	Rev:	REDUCED PRESSURE BACKFLOW PREVENTER NOTES	CITY OF LIVERMORE STANDARD DETAIL		
				Dwn: FY	Date: May-13	No.
				Ckd: Spec. Committee	Scale: None	W-22B
				City Engineer		

W22B.DWG

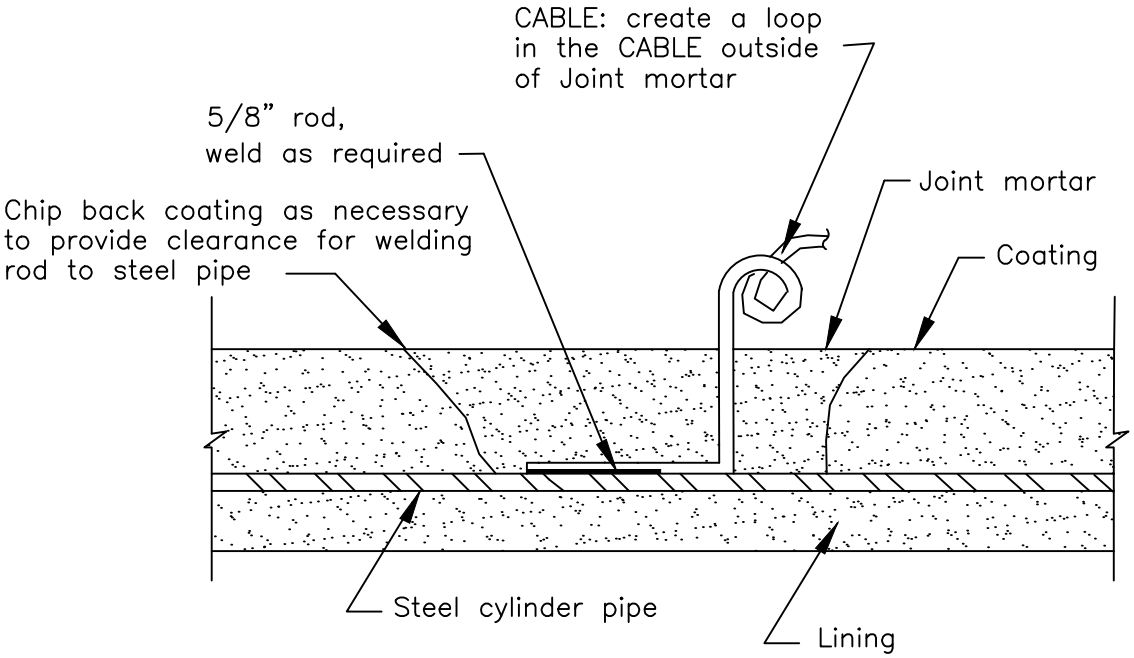

BONDING JUMPER CONNECTION DETAIL

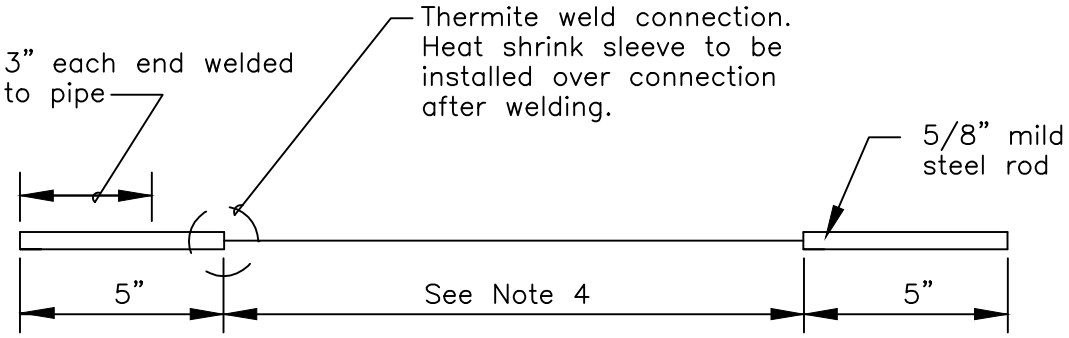

CABLE DETAIL

User note:

These details shall be used in conjunction with all the City standard details and specifications. Refer to the City standard specifications for the materials, installation, testing, protective coatings, and other requirements.

Date:	By:	Rev:

W23A.DWG

BONDING JUMPER

CITY OF LIVERMORE
STANDARD DETAIL

Dwn: FY	Date: May–13	No.
Ckd: Spec. Committee	Scale: None	W–23A

City Engineer

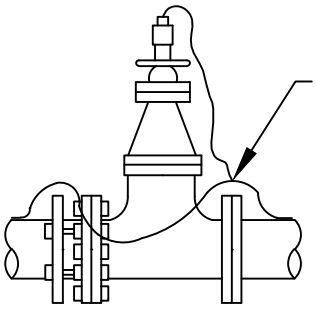

FLANGED ADAPTER

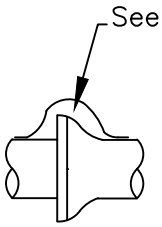

JOINT

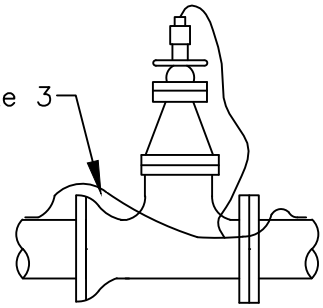

JOINT/FITTING

BELL AND SPIGOT

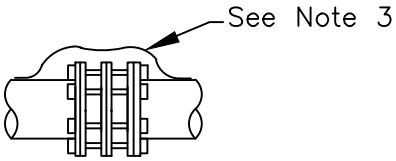

FLEXIBLE COUPLING

INSTALLATION DETAILS

Notes:

1. Bonding jumpers shall be installed, as shown, across all flexible couplings, flanged adapters and hub–end valves and fittings installed in electrically continuous pipelines.
2. Bonding jumper is NOT to be installed across insulating joints or insulating couplings.
3. Bonding jumpers to be installed with a cable length of 10" at joints. On all other connections length of cable shall be "body length" of fitting(s) plus 8" additional cable for slack.
4. LOOP CABLE sizes shall be:
   #0000 on 30" and larger pipes,
   #0 on 14" thru 27" pipes, and
   #1 on 12" and smaller pipes.

User note:
These details shall be used in conjunction with all the City standard details and specifications. Refer to the City standard specifications for the materials, installation, testing, protective coatings, and other requirements.

Date:	By:	Rev:

W23B.DWG

BONDING JUMPER

CITY OF LIVERMORE
STANDARD DETAIL

Dwn: FY	Date: May–13	No.
Ckd: Spec. Committee	Scale: None	W–23B

City Engineer

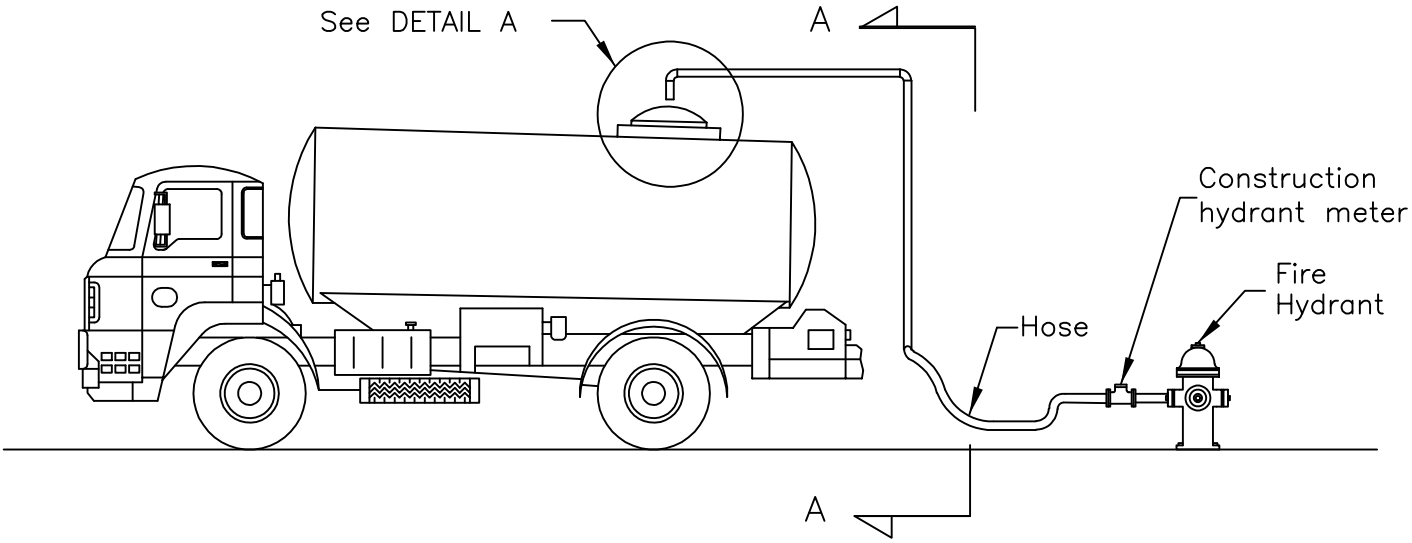

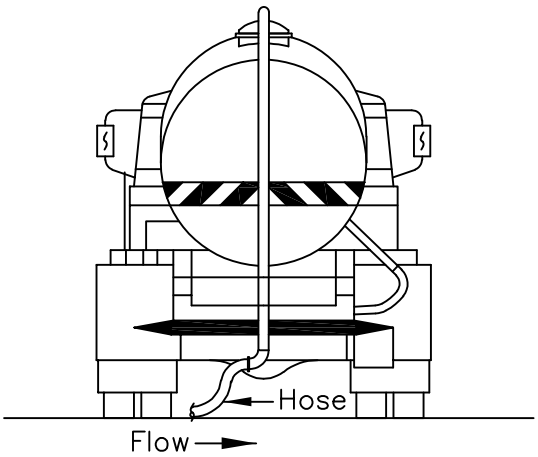

SECTION A–A

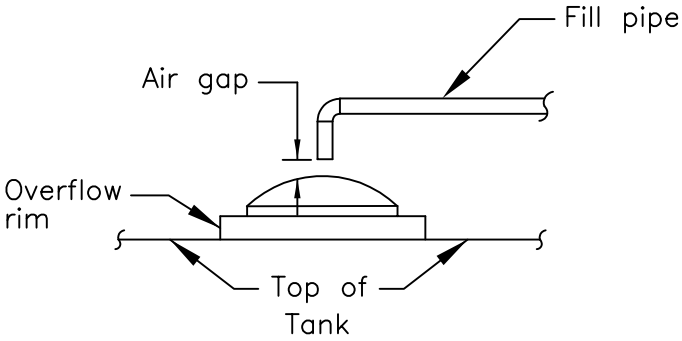

AIR GAP SEPARATION
DETAIL A

Notes:

1. All piping up to air gap must be mounted permanently to the exterior of the tank, and clearly visible.
2. Air gap must be at least 2 times the fill pipe diameter from the overflow rim but in no case less than a 1 inch minimum gap, see Detail A.
3. No internally mounted air gap piping is permitted.
4. Elevated storage tank must have backflow preventer and air gap per Detail A and certified backflow preventer.
5. Contractor must obtain recycled water placard from WRD.

User note:
These details shall be used in conjunction with all the City standard details and specifications. Refer to the City standard specifications for the materials, installation, testing, protective coatings, and other requirements.

Date:	By:	Rev:

W24.DWG

WATER TANK
TRUCK HOOK–UP
ELEVATED STORAGE TANK

CITY OF LIVERMORE
STANDARD DETAIL

Dwn: FY/HI	Date: Sept–22	No.
Ckd: Spec. Committee	Scale: None	W–24

City Engineer

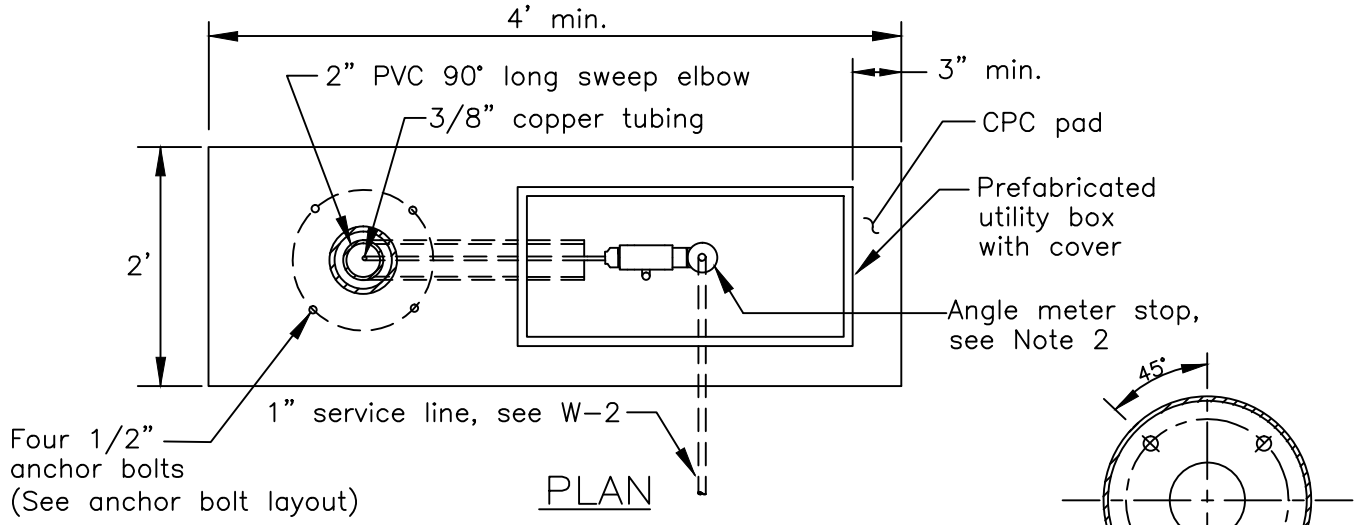

PLAN

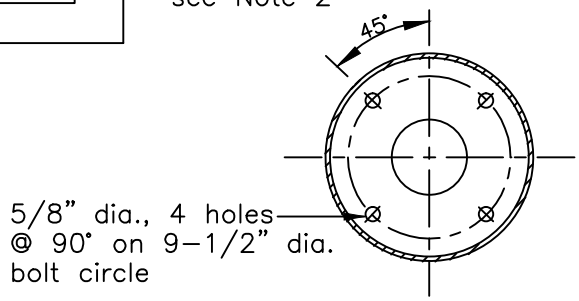

ANCHOR BOLT LAYOUT

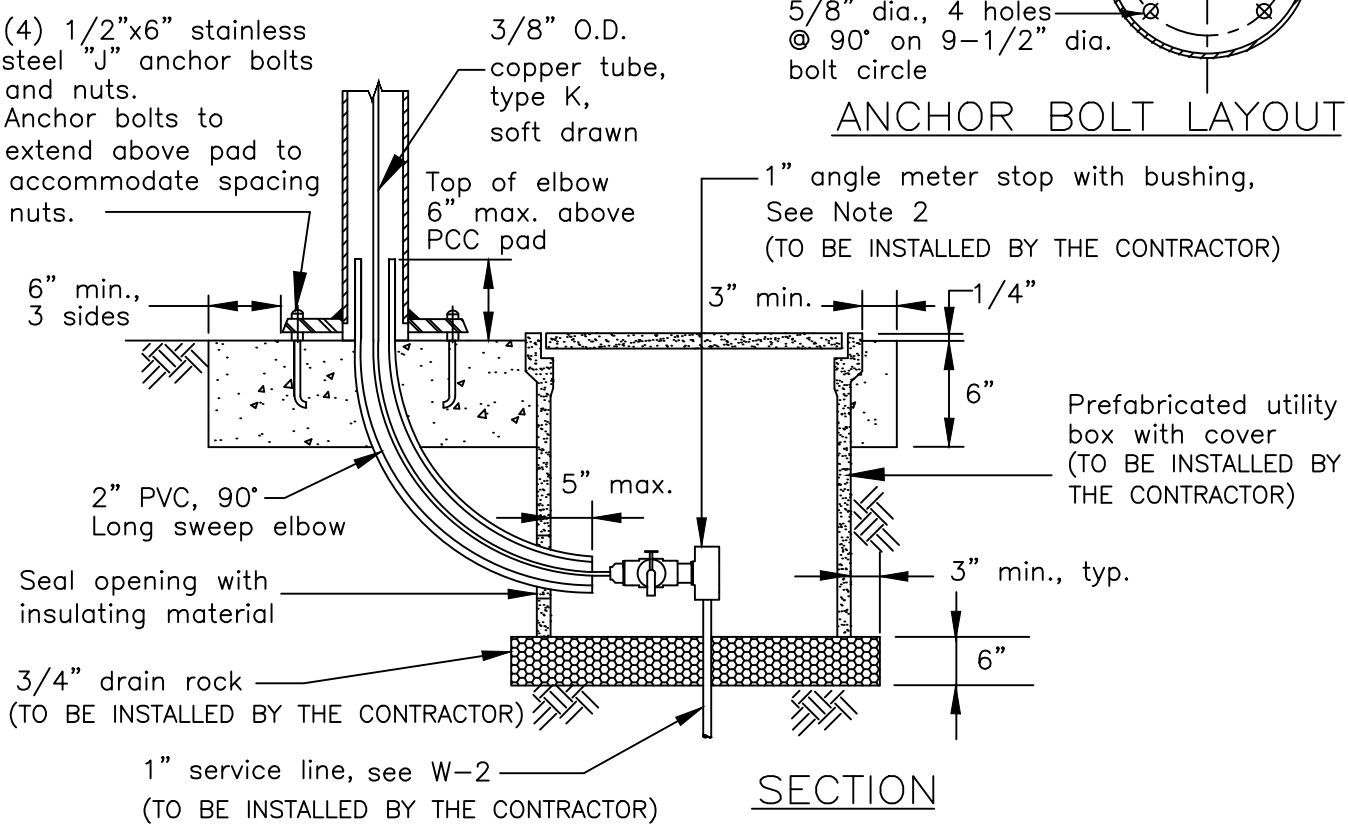

SECTION

Notes:

1. Locate Sampling Stations within City Right-of-Way or Public Utility Easement, behind sidewalk or behind curb with no sidewalk. All locations to be approved by the ENGINEER.
2. Point the angle meter stop toward the Water Sampling Station as directed by the ENGINEER.

User note:
These details shall be used in conjunction with all the City standard details and specifications. Refer to the City standard specifications for the materials, installation, testing, protective coatings, and other requirements.

Date:	By:	Rev:

WATER QUALITY SAMPLING STATION

CITY OF LIVERMORE
STANDARD DETAIL

Dwn: FY	Date: May-13	No.
Ckd: Spec. Committee	Scale: None	W-25
City Engineer		

W25.DWG

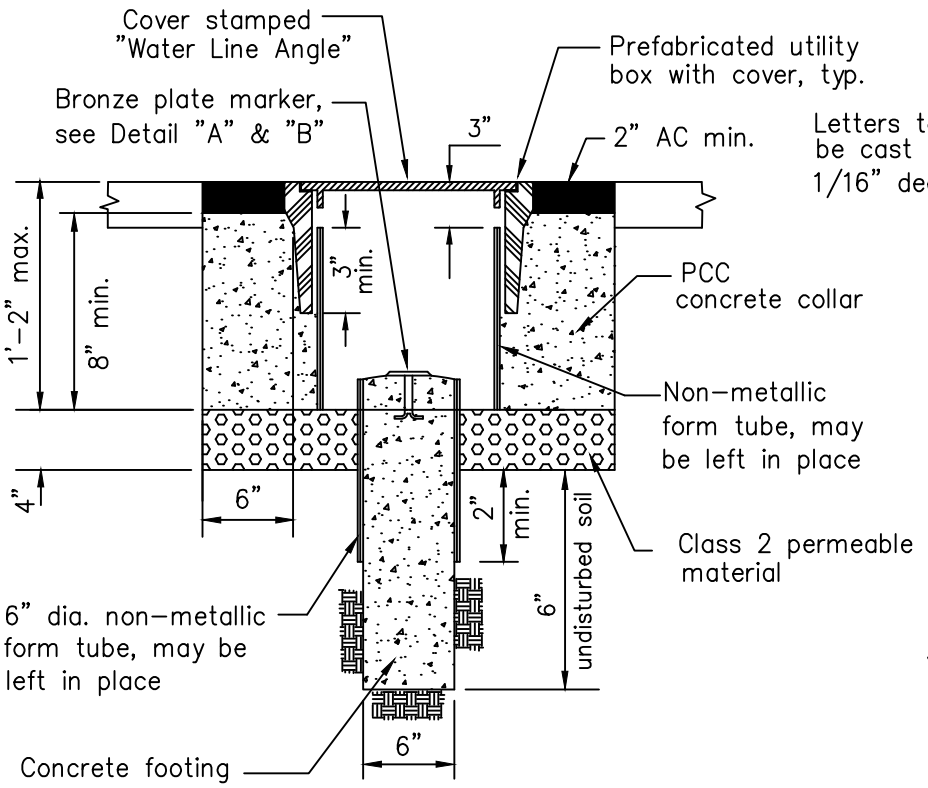

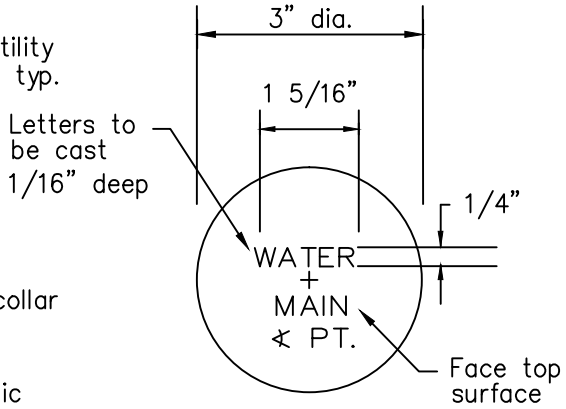

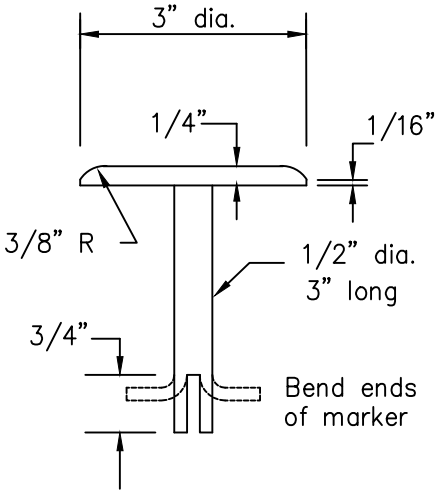

BRONZE PLATE MARKER

DETAIL "B"

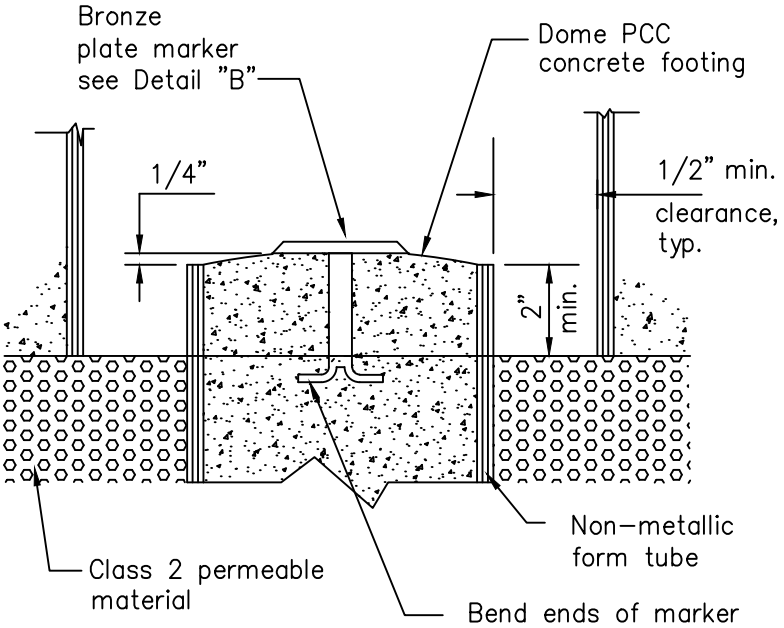

DETAIL "A"

User note:
These details shall be used in conjunction with all the City standard details and specifications. Refer to the City standard specifications for the materials, installation, testing, protective coatings, and other requirements.

Date	By	Rev.

WATER LINE ANGLE MARKER

CITY OF LIVERMORE
STANDARD DETAIL

Dwn: FY	Date: May-13	NO.
Ckd: Spec. Committee	Scale: NONE	W-26

City Engineer

W26.DWG

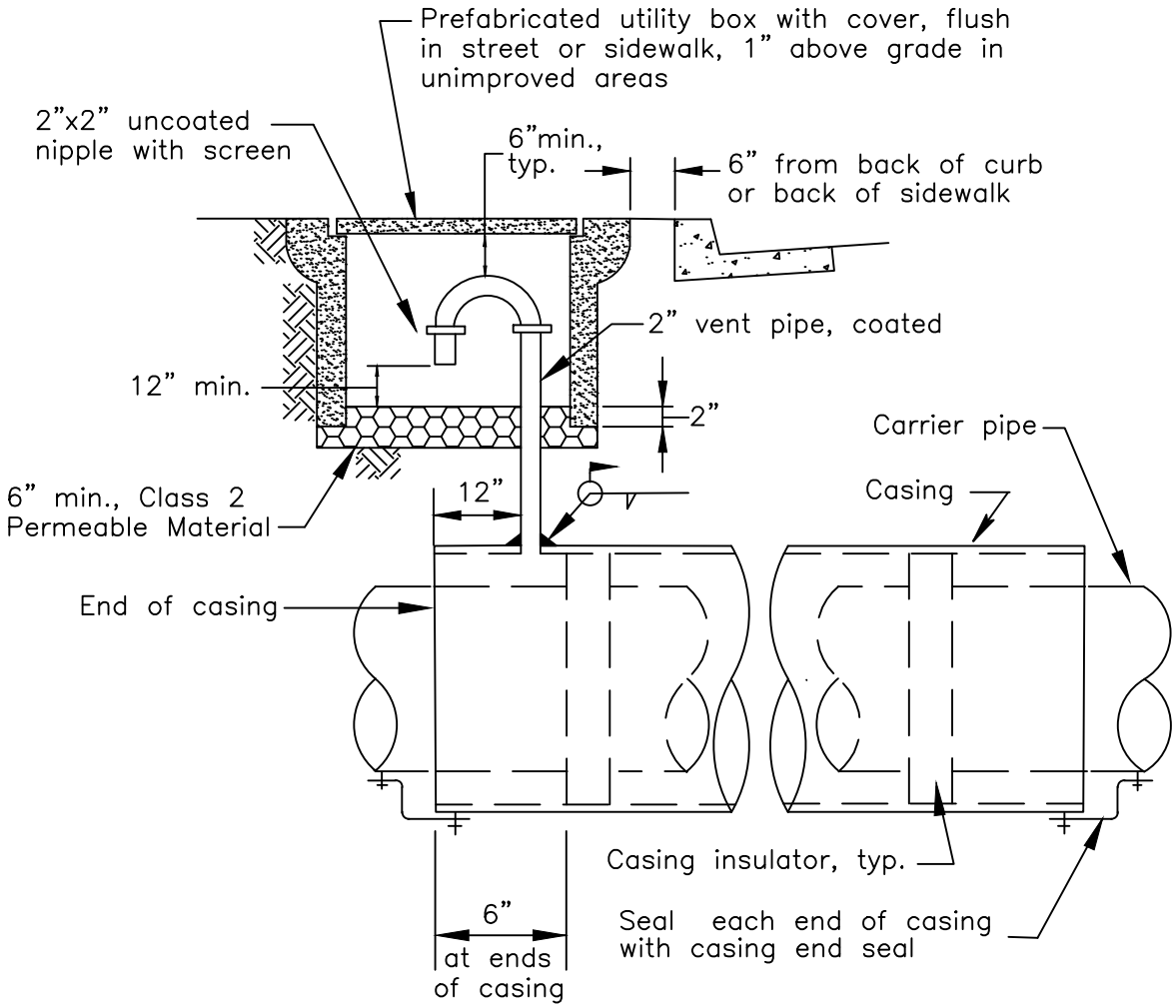

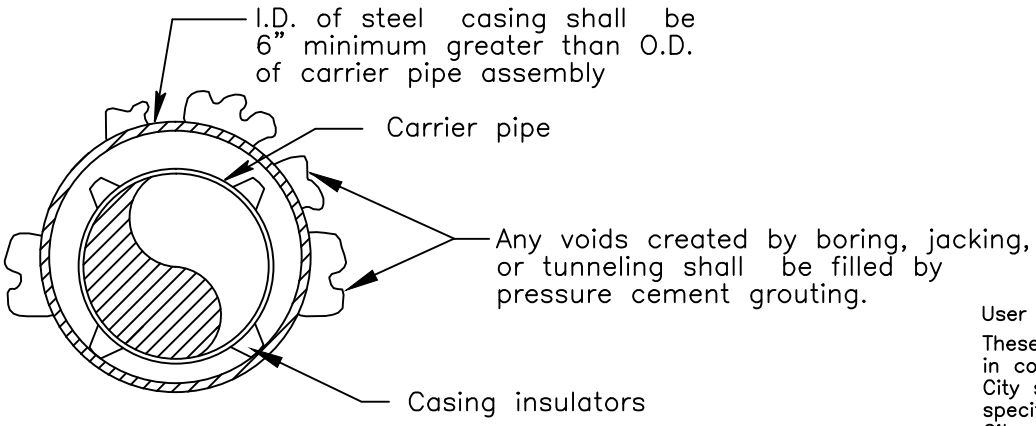

SECTION

User note:

These details shall be used in conjunction with all the City standard details and specifications. Refer to the City standard specifications for the materials, installation, testing, protective coatings, and other requirements.

Date:	By:	Rev:

G05A.DWG

STEEL CASING FOR MAINS

CITY OF LIVERMORE
STANDARD DETAIL

Dwn: M–W	Date: May–13	No.
Ckd: Spec. Committee	Scale: None	W–27A

City Engineer

Plate thickness of casing pipe				
Diameter	To 12"	15" to 27"	30" to 54"	60" to 72"
Minimum thickness	1/4"	3/8"	1/2"	5/8"

Casing shall be smooth steel pipe

Notes:

1. Carrier pipe must have restrained joints, and carrier pipe shall be tested before ends are sealed.

2. A minimum of 2 casing insulators shall be securely attached to carrier pipe. Install according to manufacturers recommendations.

3. Provide couplings in carrier pipe within 1' of each end of casing.

4. Vent pipe shall be 2" steel pipe with long radius bend, coated, and a 2" x 2" uncoated nipple with screen. Weld vent pipe to casing pipe.

5. On non-cathodically protected systems install anode(s) on casing pipe. Submit anode design for approval by the ENGINEER.

6. On cathodically protected systems insure electrical continuity on the casing pipe and the carrier pipe. Install electrolysis test station on casing pipe. Submit test station design for approval by the ENGINEER.

User note:
These details shall be used in conjunction with all the City standard details and specifications. Refer to the City standard specifications for the materials, installation, testing, protective coatings, and other requirements.

Date:	By:	Rev:

G05B.DWG

STEEL CASING FOR MAINS NOTES

CITY OF LIVERMORE
STANDARD DETAIL

Dwn: M-W	Date: May-13	No.
Ckd: Spec. Committee	Scale: None	W-27B

City Engineer